Nakamura-Tome

WTO

Tool Holder Program

AS-200 (12 ST)
AS-200 (15 ST)
JX-250
MX-100
NTJ-100
NTY³-100, WY-100 II (12 ST)
NTY³-150, 250, WY-150, 250
SC-100
SC-200
SC-250
SC-300 II
SC-450
Super NTJ
Super NTX
TW-30
WT-100
WT-150, WT-150 II, WT-250 II
WT-300

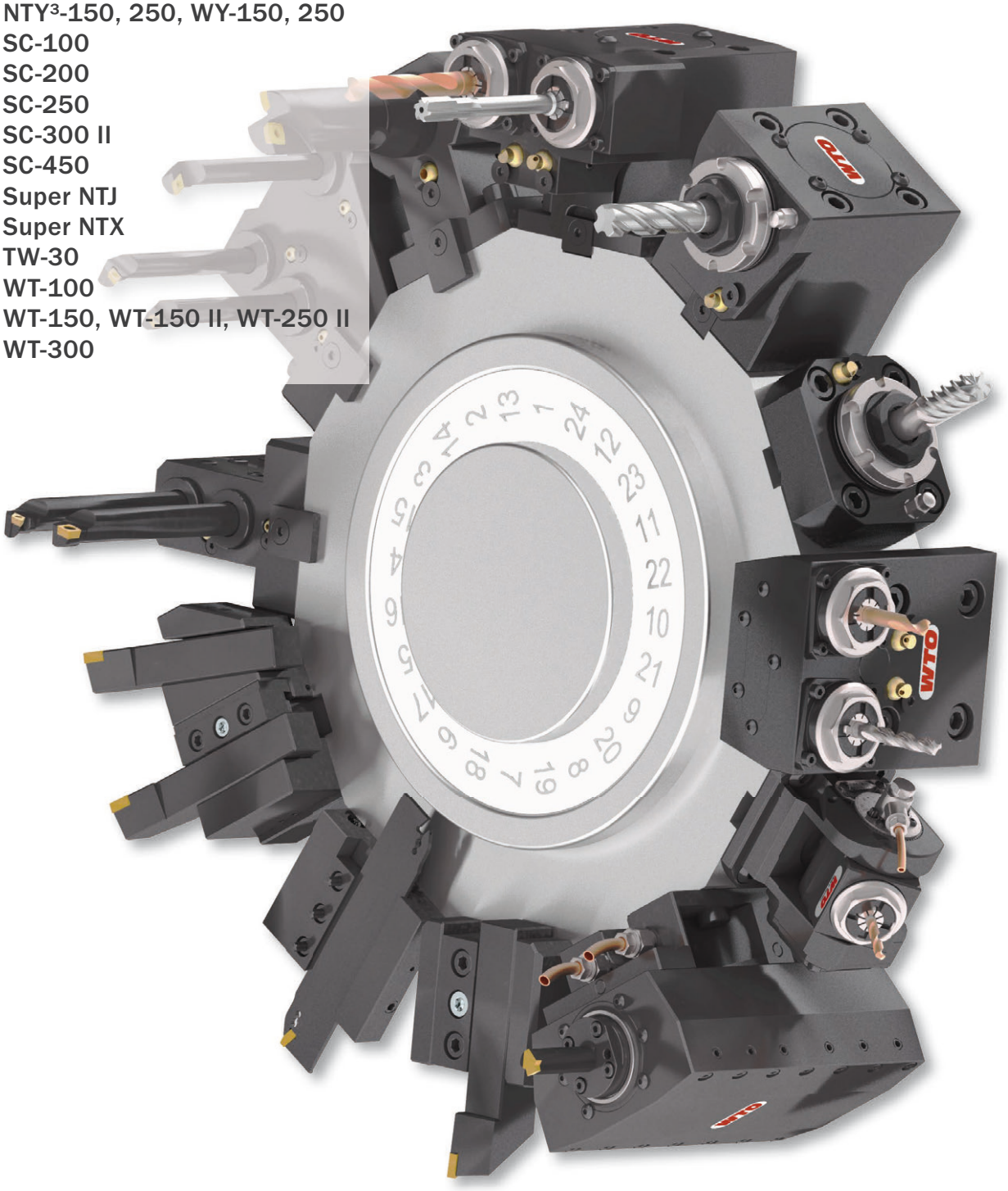

QuickFlex®

The new quick change system for
high performance and precision.

Minimal investment, maximal expandability.

Designed
for
BMT Turrets

Contents

AS-200 (12 ST)	Page	4 - 7
AS-200 (15 ST)	Page	8 - 10
JX-250	Page	11 - 13
MX-100	Page	14 - 16
NTJ-100	Page	17 - 19
NTY³-100, WY-100 II (12 ST)	Page	20 - 23
NTY³-150, 250, WY-150, 250	Page	24 - 28
SC-100	Page	29 - 31
SC-200	Page	32 - 35
SC-250	Page	36 - 39
SC-300 II	Page	40 - 42
SC-450	Page	43 - 43
Super NTJ	Page	44 - 47
Super NTX	Page	48 - 50
TW-30	Page	51 - 51
WT-100	Page	52 - 54
WT-150, WT-150 II, WT-250 II	Page	55 - 59
WT-300	Page	60 - 62
Reduction sleeves	Page	63 - 64
Collets	Page	65 - 67

EC = External coolant supply
HP-IC = High pressure internal coolant supply through cutting tool
IC 80 bar = Internal and external coolant supply
Max. coolant pressure = 80 bar
IC 30 bar = Internal and external coolant supply
Max. coolant pressure = 30 bar
Only use filtered coolant fluid (max. particle size = 50 µm)
Do not run without coolant
Do not use for machining abrasive materials such as cast iron, etc.

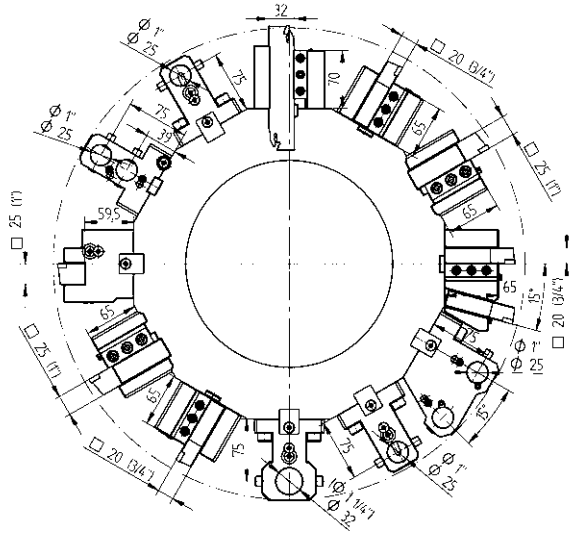

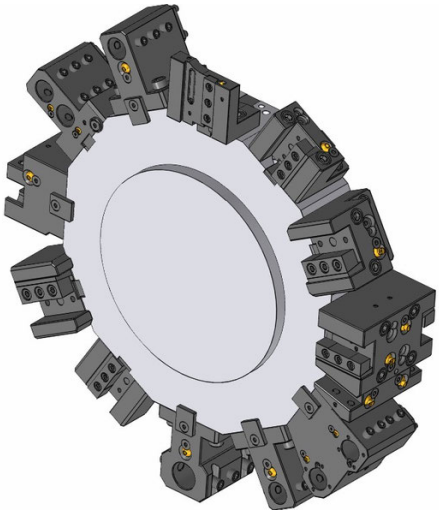

Static Toolholders - Standard Program

OD cutting holder

20	48-108585	
3/4"	48-108586	
25	48-106720	

OD cutting holder, HP-IC

25	48-106720-HP	IC 80 bar
1"	48-106730-HP	IC 80 bar

OD cutting holder, both sides

20	48-108460
3/4"	48-108588

Face cutting holder

20	48-108590
3/4"	48-108591

Face cutting holder

25	48-107758
1"	48-107759

Combination toolholder

Ø 25	48-107842	IC 80 bar
Ø 1"	48-107879	IC 80 bar
Ø 32	48-106727	IC 80 bar
Ø 1 1/4"	48-106734	IC 80 bar

Static Toolholders - Enhanced Program

OD cutting holder, double,
24 station (only for turret size 375)

20	48-108784	EC
3/4"	48-108785	EC

OD cutting holder, both sides, double,
24 station (only for turret size 375)

20	48-108786	EC
3/4"	48-108787	EC

Cut-off holder

SH 32	48-99637

Cut-off holder, HP-IC

SH 32	48-102276R	IC 80 bar
SH 32	48-102276L	IC 80 bar

Cut-off holder, adjustable

SH 32	48-110366	EC

Cut-off holder, adjustable, HP-IC

SH 32	48-109656R 343-810100R87	IC 80 bar
SH 32	48-109656L 343-810100L87	IC 80 bar

© WTO Werkzeug-Einrichtungen GmbH * Subject to change without notice * www.wto-tools.com

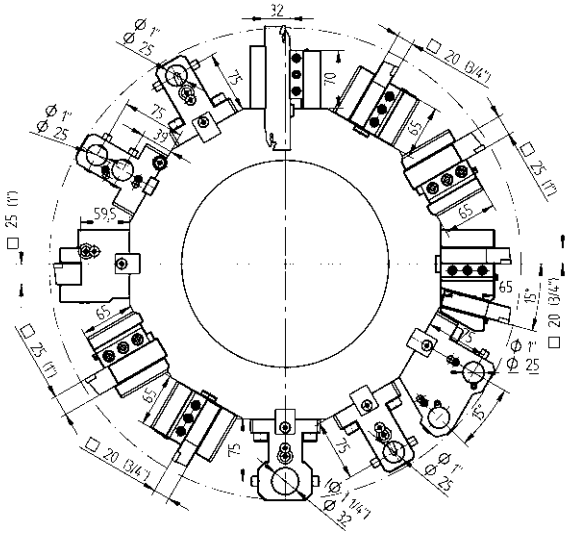

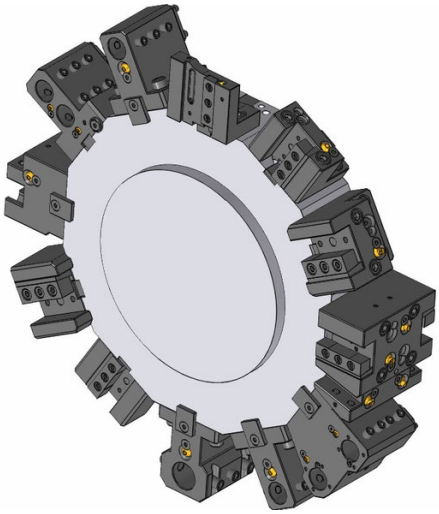

Static Toolholders - Enhanced Program

Combination toolholder, double

Ø 25	48-108792	IC 80 bar
Ø 1"	48-108793	IC 80 bar

Combination toolholder, both sides, double, 24 station (only for turret size 375)

Ø 25	48-108794	IC 80 bar
Ø 1"	48-108795	IC 80 bar

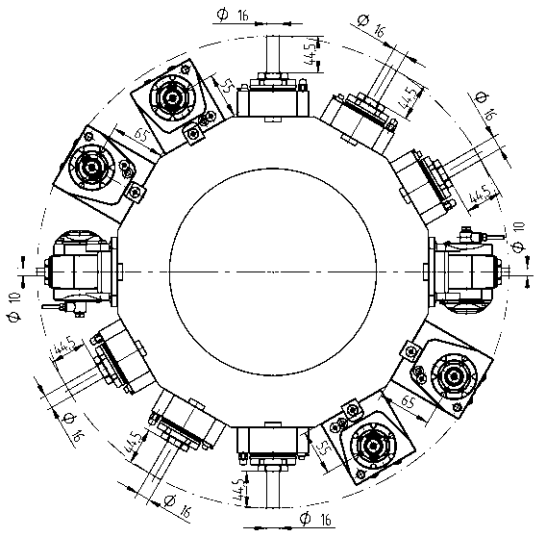

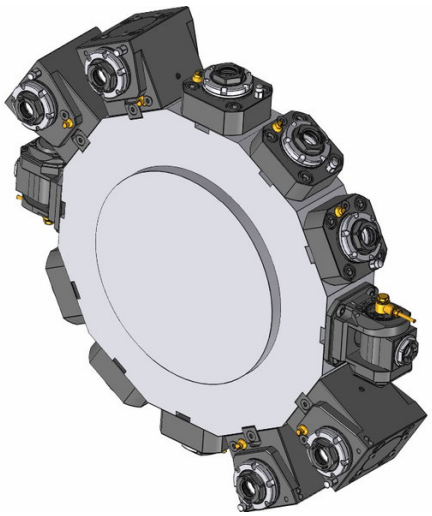

Driven Toolholders - QuickFlex®

Straight drill/milling unit

ER-25 QF	420125022-55	1:1	EC
	0067725000		
ER-25 QF	420125023-55	1:1	IC 80 bar
	0067725000		

Right angle drill/milling unit, LF=55

ER-25 QF	420525087-55	1:1	EC
	0067725000		
ER-25 QF	420525088-55	1:1	IC 80 bar
	0067725000		

Right angle drill/milling unit, LF=65

ER-25 QF	420525085-55	1:1	EC
	0067725000		
ER-25 QF	420525086-55	1:1	IC 80 bar
	0067725000		

Right angle drill/milling unit, both sides, LF=55

ER-25 QF	420525069-55	1:1	EC
	0067725000		

Right angle drill/milling unit, both sides, LF=65

ER-25 QF	420525077-55	1:1	EC
	0067725000		

Driven Toolholders - Enhanced Program

Straight drill/milling unit

ER 32	410120002-55	1:1	EC
	0067825000		
ER 32	410120003-55	1:1	IC 80 bar
	0067825000		

Straight milling unit

Ø 22	410222002-55	1:1	EC
	00675000483		
Ø 3/4"	410219000-55	1:1	EC
	00675000854		

Straight offset drill/milling unit

ER 25	410116027-55	1:1	EC
	00675000932		
ER 25	410116028-55	1:1	IC 80 bar
	00675000932		
ER 20	410113006-55	1:2	EC
	00675000939		
ER 20	410113004-55	1:2	IC 80 bar
	00675000939		
ER 16	410410000-55	1:3	EC
	00675000937		
ER 16	410410001-55	1:3	IC 80 bar
	00675000937		
ER 25	410116021-55	2:1	EC
	00675000932		
ER 25	410116022-55	2:1	IC 80 bar
	00675000932		

© WTO Werkzeug-Einrichtungen GmbH * Subject to change without notice * www.wto-tools.com

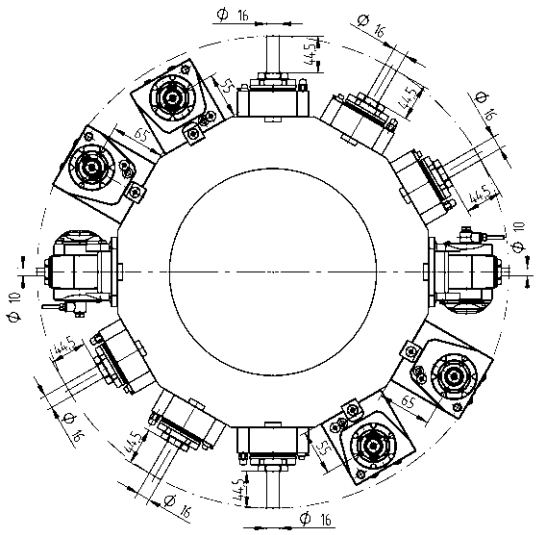

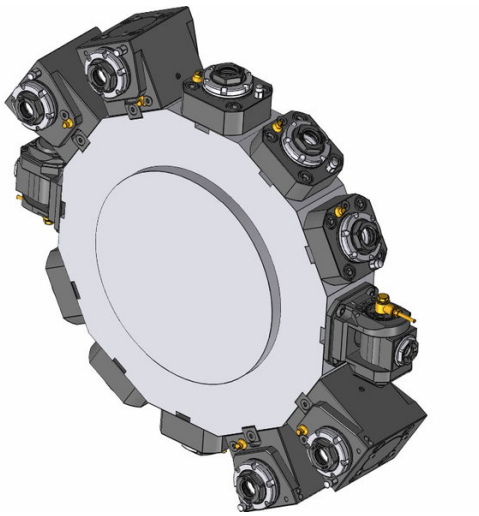

Driven Toolholders - Enhanced Program

Right angle drill/milling unit, LF=65

ER 32	410520045-55 0067825000	1:1	EC
ER 32	410520046-55 0067825000	1:1	IC 80 bar
ER-20 QF	420520029-55 0067720001	1:2	EC
ER-20 QF	420520030-55 0067720001	1:2	IC 80 bar
ER 16	410810022-55 00675000841	1:3	EC
ER 16	410810023-55 00675000841	1:3	IC 80 bar
ER-25 QF	420525055-55 0067725000	2:1	EC
ER-25 QF	420525056-55 0067725000	2:1	IC 80 bar

Right angle milling unit with combination mill arbor DIN 6358, LF=65

Ø 22	410622013-55 00675000483	1:1	EC
Ø 22	410622007-55 00675000483	2:1	EC
Ø 3/4"	410619008-55 00675000483	1:1	EC

Driven Toolholders - Enhanced Program

Adjustable angle drill/milling unit

ER 16	411010001-55 00675000902	1:1	EC
ER 16	411010002-55 00675000902	1:1	IC 80 bar
ER 11	411007003-55 00675000914	1:2	EC
ER 11	411007004-55 00675000914	1:2	IC 80 bar

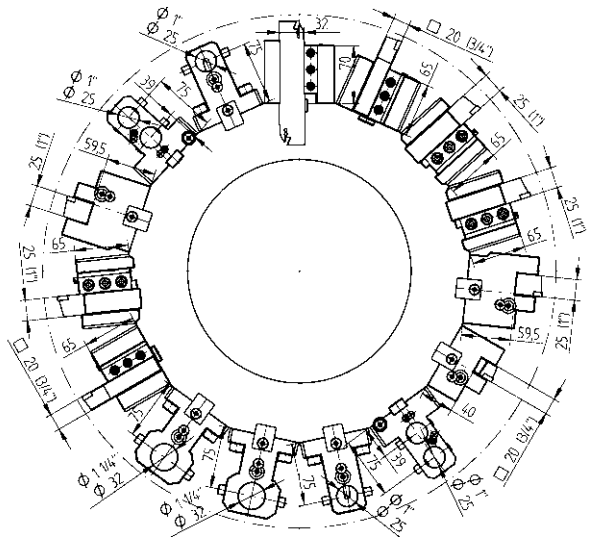

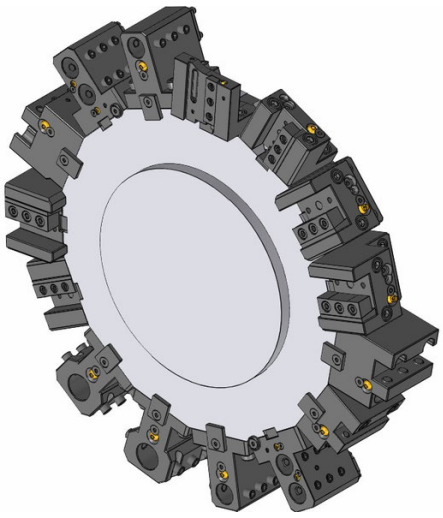

Static Toolholders - Standard Program

OD cutting holder

20	48-108585	
3/4"	48-108586	
25	48-106720	

OD cutting holder, HP-IC

25	48-106720-HP	IC 80 bar
1"	48-106730-HP	IC 80 bar

OD cutting holder, both sides

20	48-108460	
3/4"	48-108588	

Face cutting holder

20	48-108590	
3/4"	48-108591	

Face cutting holder

25	48-107758	
1"	48-107759	

Combination toolholder

Ø 25	48-107842	IC 80 bar
Ø 1"	48-107879	IC 80 bar
Ø 32	48-106727	IC 80 bar
Ø 1 1/4"	48-106734	IC 80 bar

Static Toolholders - Enhanced Program

Cut-off holder

SH 32	48-99637	

Cut-off holder, HP-IC

SH 32	48-102276R	IC 80 bar
SH 32	48-102276L	IC 80 bar

Cut-off holder, adjustable

SH 32	48-110366	EC

Cut-off holder, adjustable, HP-IC

SH 32	48-109656R 343-810100R87	IC 80 bar
SH 32	48-109656L 343-810100L87	IC 80 bar

Combination toolholder, double

Ø 25	48-108792	IC 80 bar
Ø 1"	48-108793	IC 80 bar

© WTO Werkzeug-Einrichtungen GmbH * Subject to change without notice * www.wto-tools.com

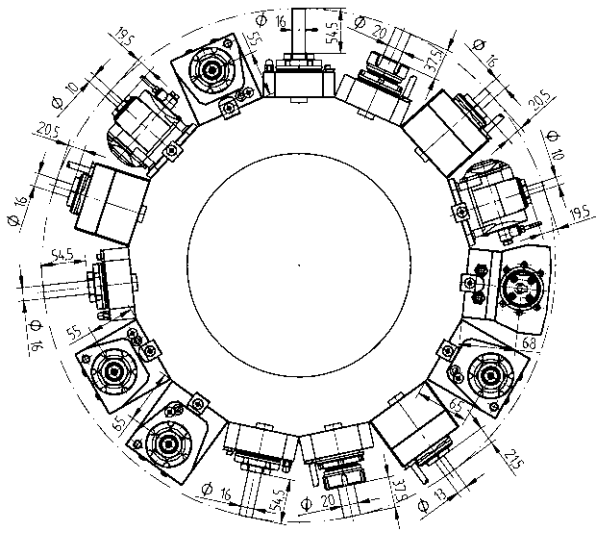

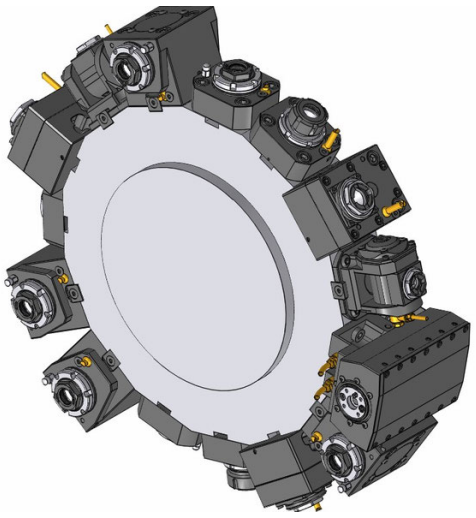

Driven Toolholders - QuickFlex®

Straight drill/milling unit

ER-25 QF	420125022-55	1:1	EC
	0067725000		
ER-25 QF	420125023-55	1:1	IC 80 bar
	0067725000		

Right angle drill/milling unit, LF=55

ER-25 QF	420525087-55	1:1	EC
	0067725000		
ER-25 QF	420525088-55	1:1	IC 80 bar
	0067725000		

Right angle drill/milling unit, LF=65

ER-25 QF	420525085-55	1:1	EC
	0067725000		
ER-25 QF	420525086-55	1:1	IC 80 bar
	0067725000		

Right angle drill/milling unit, both sides, LF=55

ER-25 QF	420525069-55	1:1	EC
	0067725000		

Right angle drill/milling unit, both sides, LF=65

ER-25 QF	420525077-55	1:1	EC
	0067725000		

Driven Toolholders - Enhanced Program

Straight drill/milling unit

ER 32	410120002-55	1:1	EC
	0067825000		
ER 32	410120003-55	1:1	IC 80 bar
	0067825000		

Straight milling unit

Ø 22	410222002-55	1:1	EC
	00675000483		
Ø 3/4"	410219000-55	1:1	EC
	00675000854		

Straight offset drill/milling unit

ER 25	410116027-55	1:1	EC
	00675000932		
ER 25	410116028-55	1:1	IC 80 bar
	00675000932		
ER 20	410113006-55	1:2	EC
	00675000939		
ER 20	410113004-55	1:2	IC 80 bar
	00675000939		
ER 16	410410000-55	1:3	EC
	00675000937		
ER 16	410410001-55	1:3	IC 80 bar
	00675000937		
ER 25	410116021-55	2:1	EC
	00675000932		
ER 25	410116022-55	2:1	IC 80 bar
	00675000932		

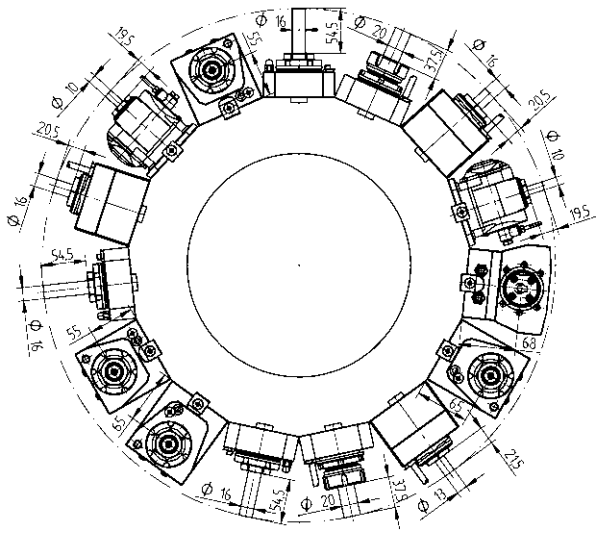

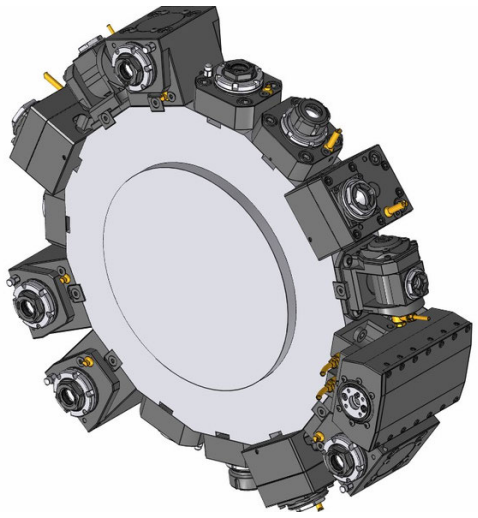

Driven Toolholders - Enhanced Program

Right angle drill/milling unit, LF=65

ER 32	410520045-55 0067825000	1:1	EC
ER 32	410520046-55 0067825000	1:1	IC 80 bar
ER-20 QF	420520029-55 0067720001	1:2	EC
ER-20 QF	420520030-55 0067720001	1:2	IC 80 bar
ER 16	410810022-55 00675000841	1:3	EC
ER 16	410810023-55 00675000841	1:3	IC 80 bar
ER-25 QF	420525055-55 0067725000	2:1	EC
ER-25 QF	420525056-55 0067725000	2:1	IC 80 bar

Right angle milling unit with combination mill arbor DIN 6358, LF=65

Ø 22	410622013-55 00675000483	1:1	EC
Ø 22	410622007-55 00675000483	2:1	EC
Ø 3/4"	410619008-55 00675000483	1:1	EC

Driven Toolholders - Enhanced Program

Right angle back set drill/milling unit, LF=65

ER 32	410520007-55 00675000592	1:1	EC
ER 32	410520008-55 00675000592	1:1	IC 80 bar
ER 32	410520009-55 00675000592	2:1	EC
ER 32	410520010-55 00675000592	2:1	IC 80 bar

Adjustable angle drill/milling unit

ER 16	411010001-55 00675000902	1:1	EC
ER 16	411010002-55 00675000902	1:1	IC 80 bar
ER 11	411007003-55 00675000914	1:2	EC
ER 11	411007004-55 00675000914	1:2	IC 80 bar

Broaching unit for ID and OD

TN765050	414532003-55	1:1	EC

© WTO Werkzeug-Einrichtungen GmbH * Subject to change without notice * www.wto-tools.com

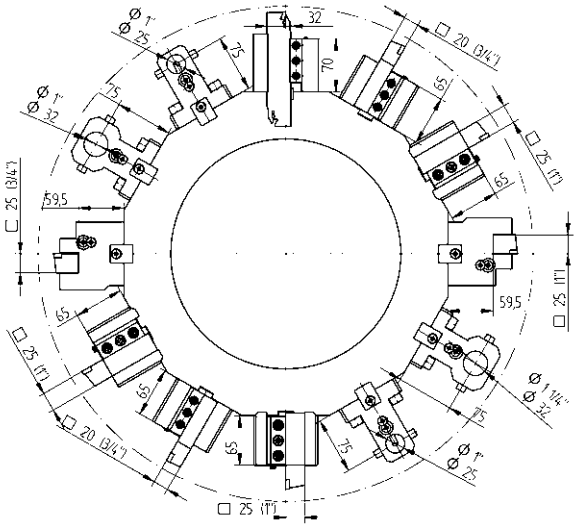

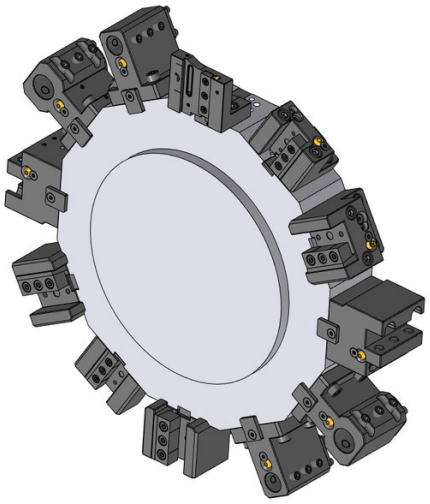

Static Toolholders - Standard Program

OD cutting holder

20	48-108585	
3/4"	48-108586	
25	48-106720	

OD cutting holder, HP-IC

25	48-106720-HP	IC 80 bar
1"	48-106730-HP	IC 80 bar

Face cutting holder

25	48-107758	
1"	48-107759	

Combination toolholder

Ø 25	48-107842	IC 80 bar
Ø 1"	48-107879	IC 80 bar
Ø 32	48-106727	IC 80 bar
Ø 1 1/4"	48-106734	IC 80 bar

Static Toolholders - Enhanced Program

Cut-off holder

SH 32	48-99637	

Cut-off holder, HP-IC

SH 32	48-102276R	IC 80 bar
SH 32	48-102276L	IC 80 bar

Cut-off holder, adjustable

SH 32	48-110366	EC

Cut-off holder, adjustable, HP-IC

SH 32	48-109656R 343-810100R87	IC 80 bar
SH 32	48-109656L 343-810100L87	IC 80 bar

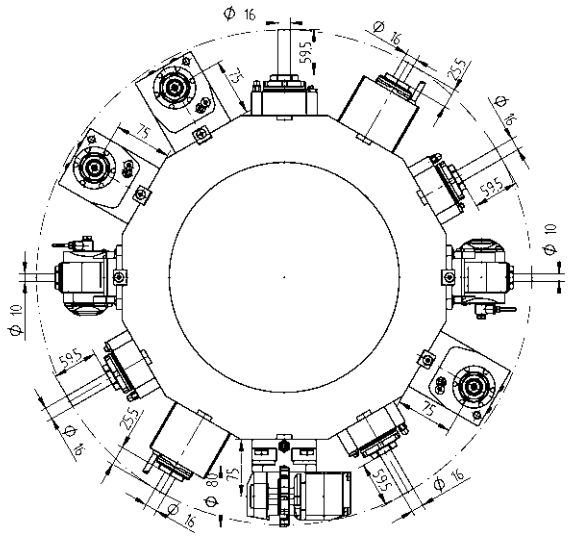

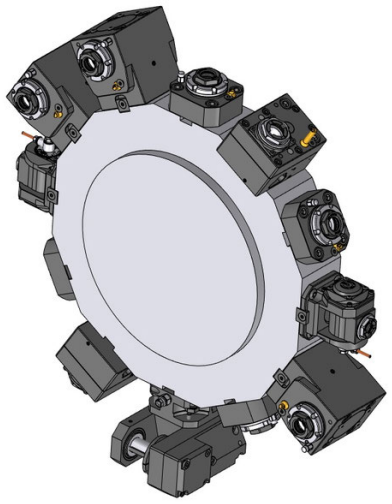

Driven Toolholders - QuickFlex®

Straight drill/milling unit

ER-25 QF	420125022-55	1:1	EC
	0067725000		
ER-25 QF	420125023-55	1:1	IC 80 bar
	0067725000		

Right angle drill/milling unit, LF=75

ER-25 QF	420525093-55	1:1	EC
	0067725000		
ER-25 QF	420525094-55	1:1	IC 80 bar
	0067725000		

Driven Toolholders - Enhanced Program

Straight drill/milling unit

ER 32	410120002-55	1:1	EC
	0067825000		
ER 32	410120003-55	1:1	IC 80 bar
	0067825000		

Straight milling unit

Ø 22	410222002-55	1:1	EC
	00675000483		
Ø 3/4"	410219000-55	1:1	EC
	00675000854		

Straight offset drill/milling unit

ER 25	410116027-55	1:1	EC
	00675000932		
ER 25	410116028-55	1:1	IC 80 bar
	00675000932		
ER 20	410113006-55	1:2	EC
	00675000939		
ER 20	410113004-55	1:2	IC 80 bar
	00675000939		
ER 16	410410000-55	1:3	EC
	00675000937		
ER 16	410410001-55	1:3	IC 80 bar
	00675000937		
ER 25	410116021-55	2:1	EC
	00675000932		
ER 25	410116022-55	2:1	IC 80 bar
	00675000932		

© WTO Werkzeug-Einrichtungen GmbH * Subject to change without notice * www.wto-tools.com

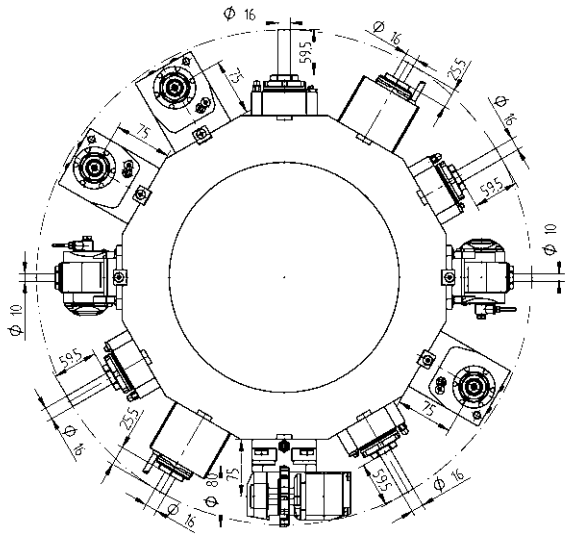

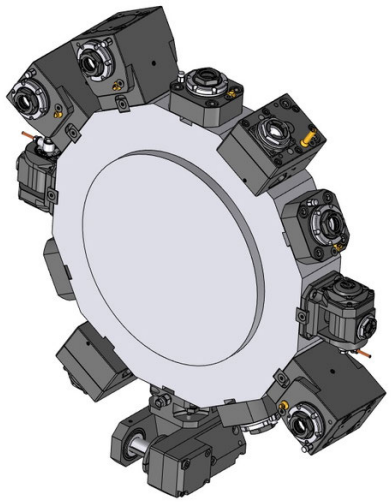

Driven Toolholders - Enhanced Program

Right angle drill/milling unit, LF=75

ER-20 QF	420520027-55	1:2	EC
	0067720001		
ER-20 QF	420520028-55	1:2	IC 80 bar
	0067720001		
ER 16	410810024-55	1:3	EC
	00675000841		
ER 16	410810025-55	1:3	IC 80 bar
	00675000841		
ER 32	410520022-55	2:1	EC
	00675000592		
ER 32	410520023-55	2:1	IC 80 bar
	00675000592		

Right angle milling unit with combination mill arbor DIN 6358, LF=75

Ø 22	410622014-55	1:1	EC
	00675000483		
Ø 22	410622008-55	2:1	EC
	00675000483		
Ø 3/4"	410619009-55	1:1	EC
	00675000483		

Driven Toolholders - Enhanced Program

Adjustable angle drill/milling unit

ER 16	411010001-55	1:1	EC
	00675000902		
ER 16	411010002-55	1:1	IC 80 bar
	00675000902		
ER 11	411007003-55	1:2	EC
	00675000914		
ER 11	411007004-55	1:2	IC 80 bar
	00675000914		

Slitting saw unit

Type 14-2	411500000-55	2.73:1	EC
	00675000489		
	160016142 Ø 16		
	160022142 Ø 22		
	160027142 Ø 27		
	160015142 Ø 5/8"		
	160019142 Ø 3/4"		
	160023142 Ø 7/8"		
	160025142 Ø 1"		

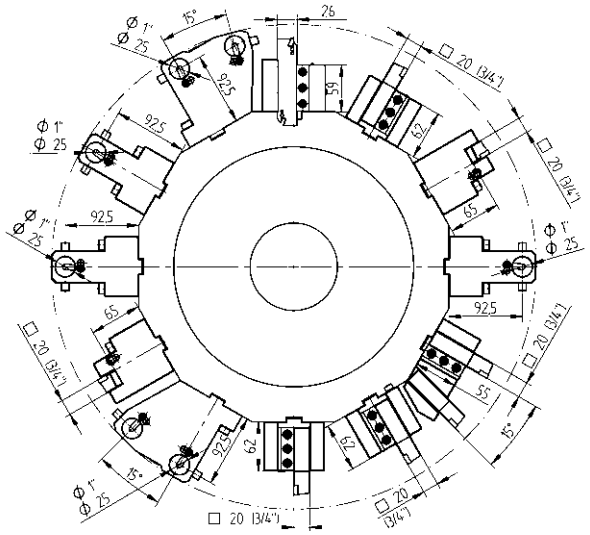

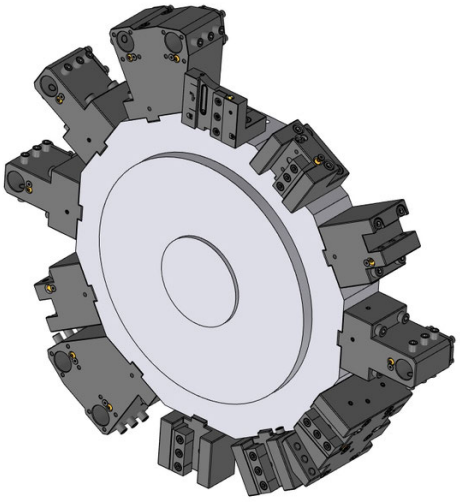

Static Toolholders - Standard Program

OD cutting holder

20	48-101470	
3/4"	48-104496	

OD cutting holder, HP-IC

20	48-101470-HP	IC 80 bar
3/4"	48-104496-HP	IC 80 bar

OD cutting holder, both sides

20	48-101471	
3/4"	48-104755	

Face cutting holder

20	48-102352	
3/4"	48-104735	

Combination toolholder, LF=92,5

Ø 25	48-106613	
Ø 1"	48-106614	

Static Toolholders - Enhanced Program

OD cutting holder, both sides, double, 24 station (only for turret size 390)

20	48-114360	EC
3/4"	48-114361	EC

Cut-off holder

SH 26	48-100419	

Cut-off holder, HP-IC

SH 26	48-102274R	IC 80 bar
SH 26	48-102274L	IC 80 bar
SH 32	48-112233R 343-810100R95	IC 80 bar
SH 32	48-112233L 343-810100L95	IC 80 bar

Combination toolholder, universal, double, 24 station (only for turret size 390)

Ø 25	48-114362	IC 80 bar
Ø 1"	48-114363	IC 80 bar

© WTO Werkzeug-Einrichtungen GmbH * Subject to change without notice * www.wto-tools.com

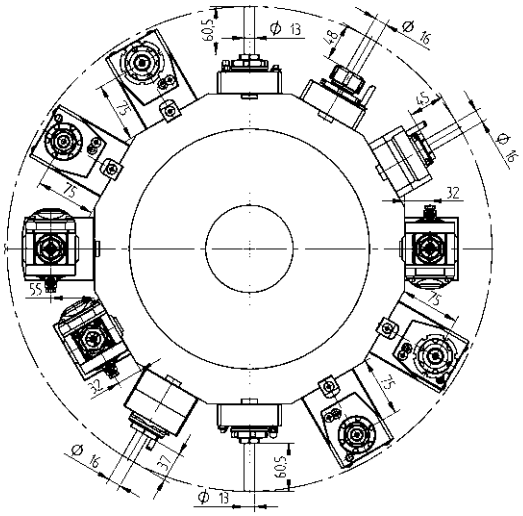

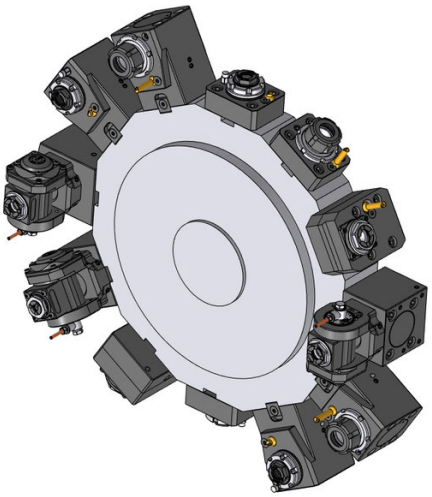

Driven Toolholders - QuickFlex®

Straight drill/milling unit

ER-20 QF	420120010-44	1:1	EC
	0067720000		
ER-20 QF	420120011-44	1:1	IC 80 bar
	0067720000		

Right angle drill/milling unit, LF=75

ER-20 QF	420520015-44	1:1	EC
	0067720000		
ER-20 QF	420520016-44	1:1	IC 80 bar
	0067720000		

Driven Toolholders - Enhanced Program

Straight drill/milling unit

ER 25	410116004-44	1:1	EC
	00675000720		
ER 25	410116002-44	1:1	IC 80 bar
	00675000720		

Straight offset drill/milling unit

ER 20	410113004-44	1:2	EC
	00675000939		
ER 16	410110002-44	1:3	EC
	00675000937		
ER 25	410116005-44	1.5:1	EC
	00675000932		

Right angle drill/milling unit, LF=75

ER 25	410516007-44	1:1	EC
	00675000720		
ER 25	410516008-44	1:1	IC 80 bar
	00675000720		

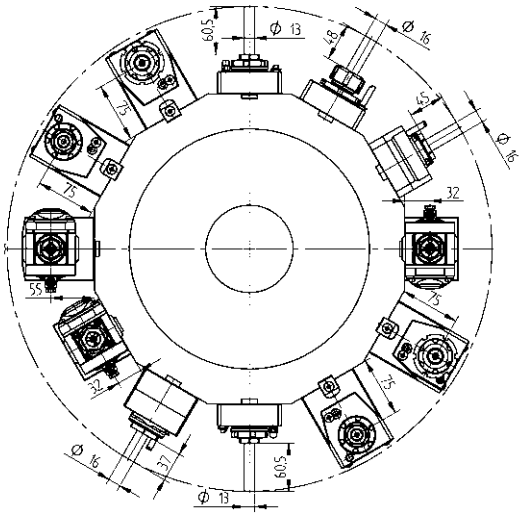

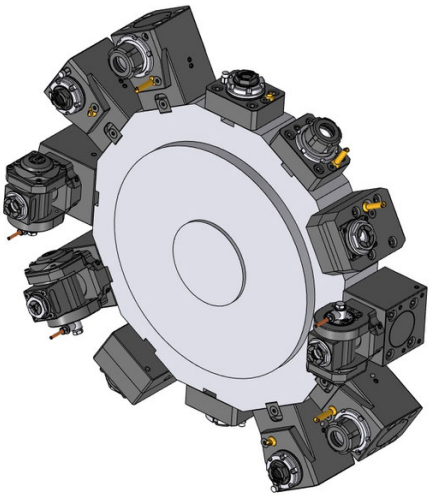

Driven Toolholders - Enhanced Program

Adjustable angle drill/milling unit, LF=32

ER 16	411010004-44	1:1	EC
	00675000902		
ER 16	411010005-44	1:1	IC 80 bar
	00675000902		
ER 11	411007006-44	1:2	EC
	00675000914		
ER 11	411007007-44	1:2	IC 80 bar
	00675000914		

Adjustable angle drill/milling unit, LF=55

ER 16	411010007-44	1:1	EC
	00675000902		
ER 16	411010011-44	1:1	IC 80 bar
	00675000902		
ER 11	411007009-44	1:2	EC
	00675000914		
ER 11	411007008-44	1:2	IC 80 bar
	00675000914		

© WTO Werkzeug-Einrichtungen GmbH * Subject to change without notice * www.wto-tools.com

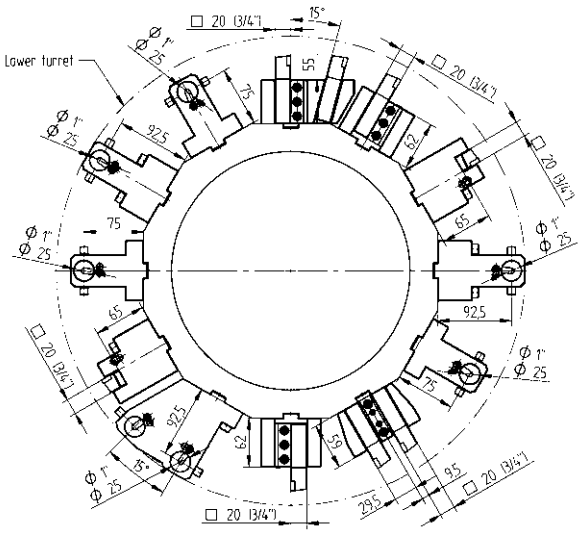

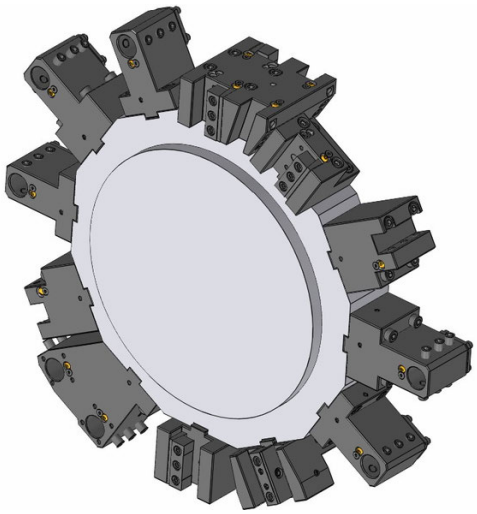

Static Toolholders - Standard Program

OD cutting holder

20	48-101470	
3/4"	48-104496	

OD cutting holder, HP-IC

20	48-101470-HP	IC 80 bar
3/4"	48-104496-HP	IC 80 bar

OD cutting holder, both sides

20	48-101471
3/4"	48-104755

Face cutting holder

20	48-102352
3/4"	48-104735

Combination toolholder, LF=75

Ø 25	48-101472
Ø 1"	48-104526

Combination toolholder, LF=92,5

Ø 25	48-106613
Ø 1"	48-106614

Static Toolholders - Enhanced Program

OD cutting holder, double, Y axis

20	48-101473	
3/4"	48-104523	

OD cutting holder, both sides, double, 24 station (only for turret size 370)

20	48-108104	EC
3/4"	48-108148	EC

Cut-off holder

SH 26	48-100419

Cut-off holder, HP-IC

SH 26	48-102274R	IC 80 bar
SH 26	48-102274L	IC 80 bar
SH 32	48-112233R 343-810100R95	IC 80 bar
SH 32	48-112233L 343-810100L95	IC 80 bar

Combination toolholder, universal, double, 24 station (only for turret size 300)

Ø 25	48-107985	IC 80 bar
Ø 1"	48-108111	IC 80 bar

Combination toolholder, universal, double, 24 station (only for turret size 370)

Ø 25	48-108103	IC 80 bar
Ø 1"	48-108147	IC 80 bar

© WTO Werkzeug-Einrichtungen GmbH * Subject to change without notice * www.wto-tools.com

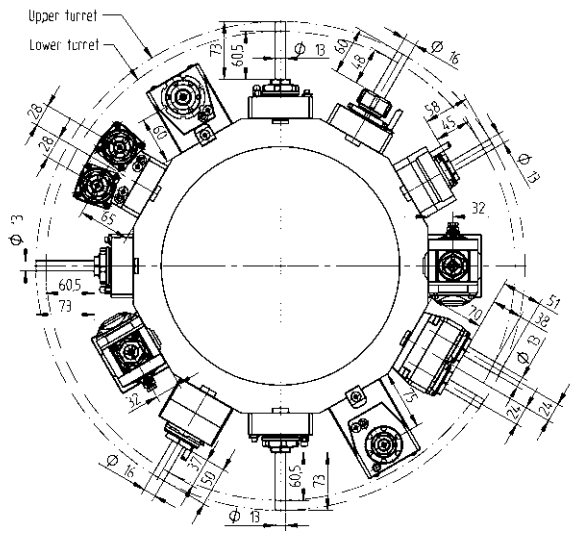

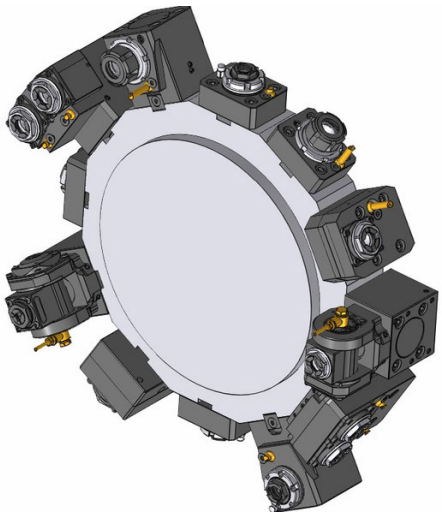

Driven Toolholders - QuickFlex®

Straight drill/milling unit

ER-20 QF	420120010-44	1:1	EC
	0067720000		
ER-20 QF	420120011-44	1:1	IC 80 bar
	0067720000		

Right angle drill/milling unit, LF=60

ER-20 QF	420520010-44	1:1	EC
	0067720000		
ER-20 QF	420520011-44	1:1	IC 80 bar
	0067720000		

Right angle drill/milling unit, LF=75

ER-20 QF	420520015-44	1:1	EC
	0067720000		
ER-20 QF	420520016-44	1:1	IC 80 bar
	0067720000		

Right angle drill/milling unit, both sides, LF=60

ER-20 QF	420520012-44	1:1	EC
	0067720000		

Driven Toolholders - Enhanced Program

Straight drill/milling unit

ER 25	410116004-44	1:1	EC
	00675000720		
ER 25	410116002-44	1:1	IC 80 bar
	00675000720		

Straight offset drill/milling unit

ER 20	410113004-44	1:2	EC
	00675000939		
ER 16	410110002-44	1:3	EC
	00675000937		
ER 25	410116005-44	1.5:1	EC
	00675000932		

© WTO Werkzeug-Einrichtungen GmbH * Subject to change without notice * www.wto-tools.com

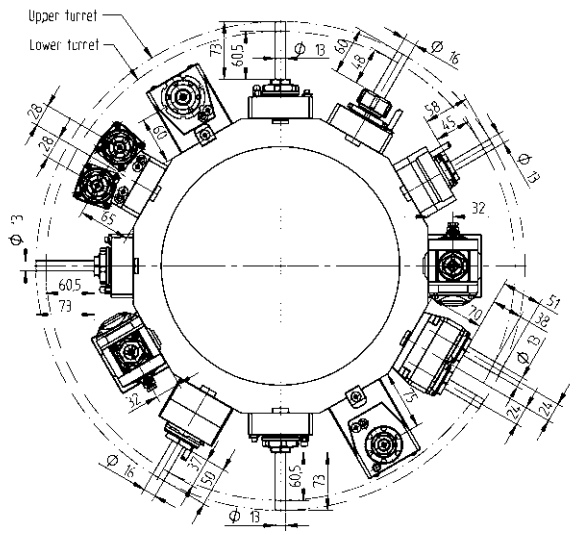

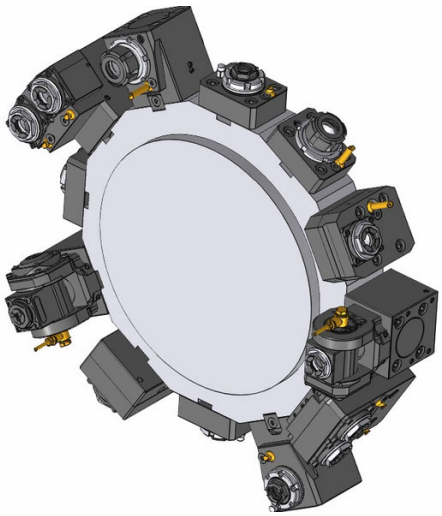

Driven Toolholders - Enhanced Program

Right angle drill/milling unit, LF=60

ER 25	410516005-44	1:1	EC
	00675000720		
ER 25	410516006-44	1:1	IC 80 bar
	00675000720		
ER 20	410513002-44	1:2	EC
	00675000833		
ER 20	410513003-44	1:2	IC 80 bar
	00675000833		
ER 16	410810006-44	1:3	EC
	00675000841		
ER 16	410810007-44	1:3	IC 80 bar
	00675000841		
ER 25	410516002-44	2:1	EC
	00675000720		
ER 25	410516003-44	2:1	IC 80 bar
	00675000720		

Right angle drill/milling unit, LF=75

ER 25	410516007-44	1:1	EC
	00675000720		
ER 25	410516008-44	1:1	IC 80 bar
	00675000720		

Right angle milling unit with combination mill arbor DIN 6358, LF=60

Ø 22	410622000-44	1:1	EC
	00675000483		
Ø 22	410622001-44	2:1	EC
	00675000483		

Driven Toolholders - Enhanced Program

Adjustable angle drill/milling unit, LF=32

ER 16	411010004-44	1:1	EC
	00675000902		
ER 16	411010005-44	1:1	IC 80 bar
	00675000902		
ER 11	411007006-44	1:2	EC
	00675000914		
ER 11	411007007-44	1:2	IC 80 bar
	00675000914		

Straight drill/milling unit, double, Y axis

ER 20	413002003-44	1:1	EC
	00675000939		
ER 20	413002004-44	1:1	IC 80 bar
	00675000939		

2-spindle - Right angle drill/milling unit, Y axis

ER 20	413502004-44	1:1	EC
	00675000939		
ER 20	413502005-44	1:1	IC 80 bar
	00675000939		

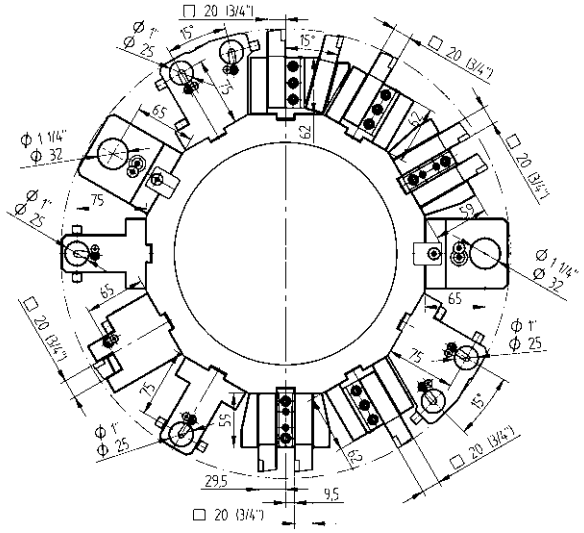

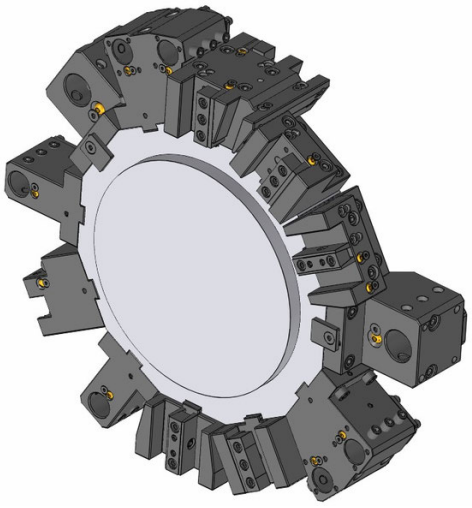

Static Toolholders - Standard Program

OD cutting holder

20	48-101470	
3/4"	48-104496	

OD cutting holder, HP-IC

20	48-101470-HP	IC 80 bar
3/4"	48-104496-HP	IC 80 bar

OD cutting holder, both sides

20	48-101471
3/4"	48-104755

Face cutting holder

20	48-102352
3/4"	48-104735

Combination toolholder, LF=75

Ø 25	48-101472
Ø 1"	48-104526

Combination toolholder

Ø 32	48-107155
Ø 1 1/4"	48-107260

Static Toolholders - Enhanced Program

OD cutting holder, double, Y axis

20	48-101473	
3/4"	48-104523	

OD cutting holder, both sides, double, 24 station (only for turret size 300)

20	48-107973	EC
3/4"	48-108110	EC

Cut-off holder

SH 26	48-100419

Cut-off holder, HP-IC

SH 26	48-102274R	IC 80 bar
SH 26	48-102274L	IC 80 bar
SH 32	48-112233R 343-810100R95	IC 80 bar
SH 32	48-112233L 343-810100L95	IC 80 bar

Combination toolholder, universal, double, 24 station (only for turret size 300)

Ø 25	48-107985	IC 80 bar
Ø 1"	48-108111	IC 80 bar

© WTO Werkzeug-Einrichtungen GmbH * Subject to change without notice * www.wto-tools.com

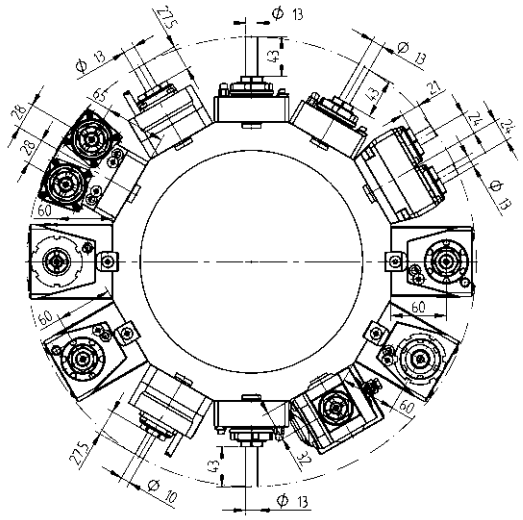

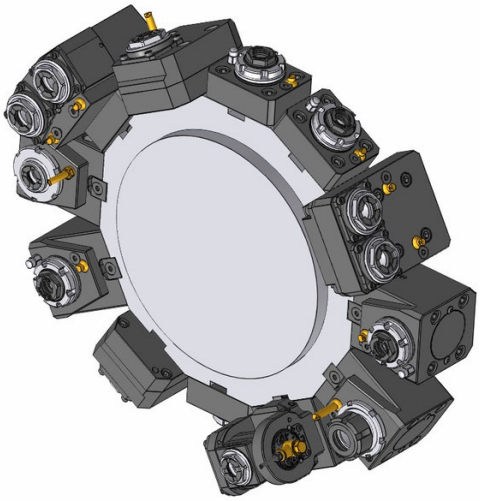

Driven Toolholders - QuickFlex®

Straight drill/milling unit

ER-20 QF	420120010-44	1:1	EC
	0067720000		
ER-20 QF	420120011-44	1:1	IC 80 bar
	0067720000		

Straight drill/milling unit (8000 RPM)

ER-20 QF	420120010-44-S	1:1	EC
	0067720000		
ER-20 QF	420120011-44-S	1:1	IC 80 bar
	0067720000		

Right angle drill/milling unit, LF=60

ER-20 QF	420520010-44	1:1	EC
	0067720000		
ER-20 QF	420520011-44	1:1	IC 80 bar
	0067720000		

Right angle drill/milling unit, LF=60, (8000 RPM)

ER-20 QF	420520010-44-S	1:1	EC
	0067720000		
ER-20 QF	420520011-44-S	1:1	IC 80 bar
	0067720000		

Driven Toolholders - QuickFlex®

Right angle drill/milling unit, both sides, LF=60

ER-20 QF	420520012-44	1:1	EC
	0067720000		

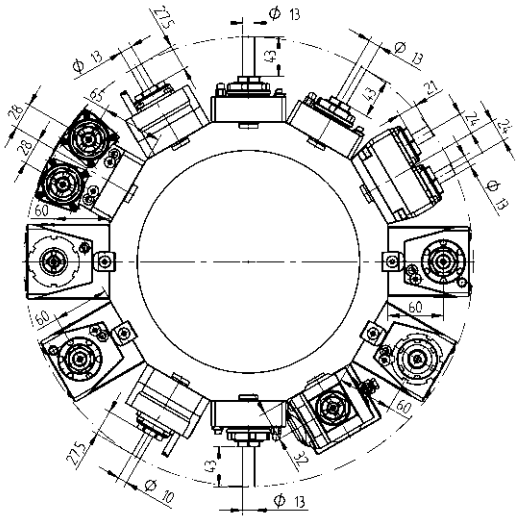

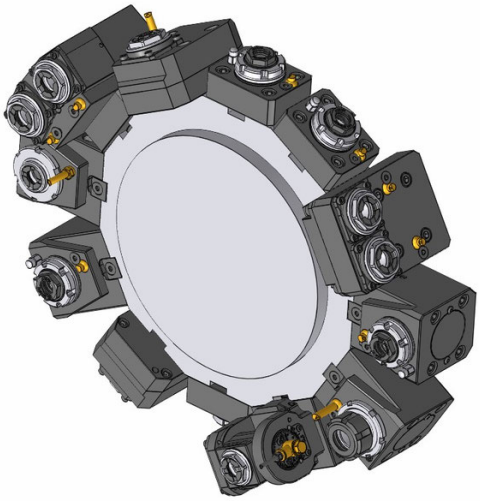

Driven Toolholders - Enhanced Program

Straight drill/milling unit

ER 25	410116004-44	1:1	EC
	00675000720		
ER 25	410116002-44	1:1	IC 80 bar
	00675000720		

Straight drill/milling unit (8000 RPM)

ER 25	410116004-44-S	1:1	EC
	00675000720		
ER 25	410116002-44-S	1:1	IC 80 bar
	00675000720		

Straight offset drill/milling unit

ER 20	410113004-44	1:2	EC
	00675000939		
ER 16	410110002-44	1:3	EC
	00675000937		
ER 25	410116005-44	1.5:1	EC
	00675000932		

Driven Toolholders - Enhanced Program

Right angle drill/milling unit, LF=60

ER 25	410516005-44	1:1	EC
	00675000720		
ER 25	410516006-44	1:1	IC 80 bar
	00675000720		
ER 20	410513002-44	1:2	EC
	00675000833		
ER 20	410513003-44	1:2	IC 80 bar
	00675000833		
ER 16	410810006-44	1:3	EC
	00675000841		
ER 16	410810007-44	1:3	IC 80 bar
	00675000841		
ER 25	410516002-44	2:1	EC
	00675000720		
ER 25	410516003-44	2:1	IC 80 bar
	00675000720		

Right angle drill/milling unit, LF=60, (8000 RPM)

ER 25	410516005-44-S	1:1	EC
	00675000720		
ER 25	410516006-44-S	1:1	IC 80 bar
	00675000720		

Right angle milling unit with combination mill arbor DIN 6358, LF=60

Ø 22	410622000-44	1:1	EC
	00675000483		
Ø 22	410622001-44	2:1	EC
	00675000483		

© WTO Werkzeug-Einrichtungen GmbH * Subject to change without notice * www.wto-tools.com

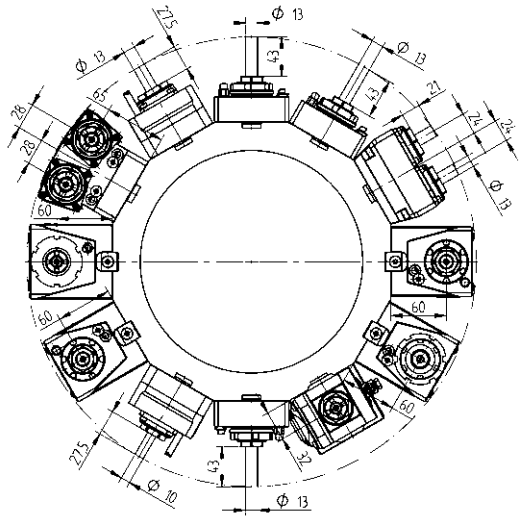

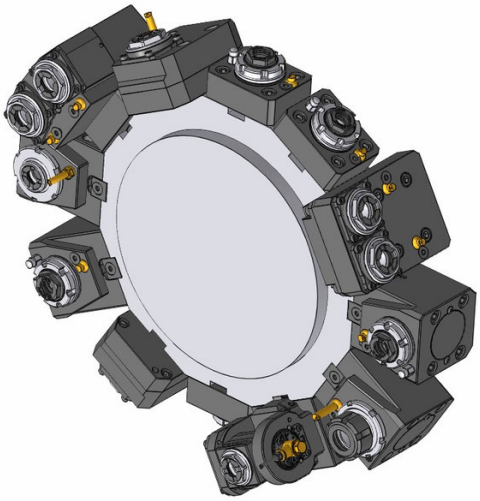

Driven Toolholders - Enhanced Program

Adjustable angle drill/milling unit, LF=32

ER 16	411010004-44	1:1	EC
	00675000902		
ER 16	411010005-44	1:1	IC 80 bar
	00675000902		
ER 11	411007006-44	1:2	EC
	00675000914		
ER 11	411007007-44	1:2	IC 80 bar
	00675000914		

Adjustable angle drill/milling unit, LF=55

ER 16	411010007-44	1:1	EC
	00675000902		
ER 16	411010011-44	1:1	IC 80 bar
	00675000902		
ER 11	411007009-44	1:2	EC
	00675000914		
ER 11	411007008-44	1:2	IC 80 bar
	00675000914		

Straight drill/milling unit, double, Y axis

ER 20	413002003-44	1:1	EC
	00675000939		
ER 20	413002004-44	1:1	IC 80 bar
	00675000939		

Driven Toolholders - Enhanced Program

2-spindle - Right angle drill/milling unit, Y axis

ER 20	413502004-44	1:1	EC
	00675000939		
ER 20	413502005-44	1:1	IC 80 bar
	00675000939		

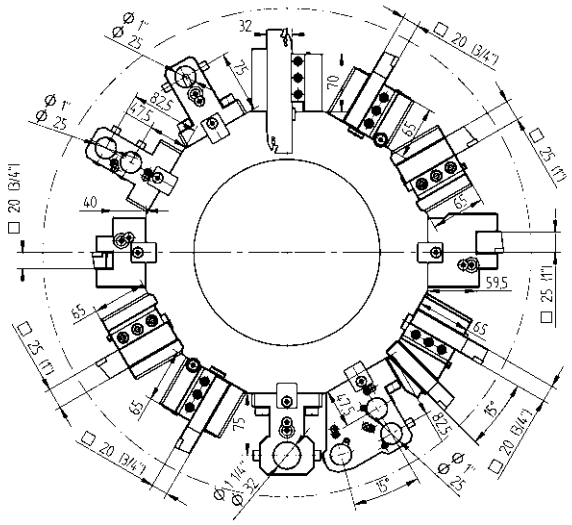

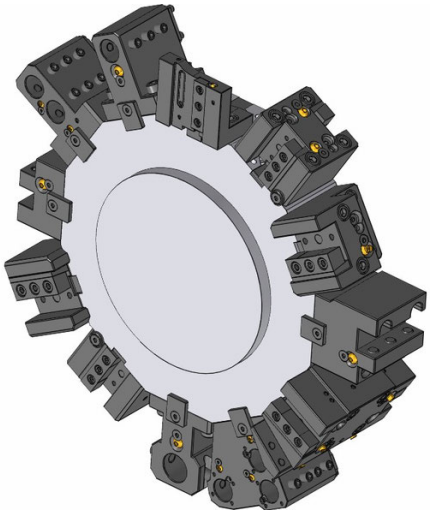

Static Toolholders - Standard Program

OD cutting holder

20	48-108585	
3/4"	48-108586	
25	48-106720	

OD cutting holder, HP-IC

25	48-106720-HP	IC 80 bar
1"	48-106730-HP	IC 80 bar

OD cutting holder, both sides

20	48-108460	
3/4"	48-108588	

Face cutting holder

20	48-108590	
3/4"	48-108591	

Face cutting holder

25	48-107758	
1"	48-107759	

Combination toolholder

Ø 25	48-107842	IC 80 bar
Ø 1"	48-107879	IC 80 bar
Ø 32	48-106727	IC 80 bar
Ø 1 1/4"	48-106734	IC 80 bar

Static Toolholders - Enhanced Program

OD cutting holder, double, 24 station (only for turret size 340)

20	48-108592	EC
3/4"	48-108593	EC

OD cutting holder, both sides, double, 24 station (only for turret size 340)

20	48-108461	EC
3/4"	48-108595	EC

Cut-off holder

SH 32	48-99637	

Cut-off holder, HP-IC

SH 32	48-102276R	IC 80 bar
SH 32	48-102276L	IC 80 bar

Cut-off holder, adjustable

SH 32	48-110366	EC

Cut-off holder, adjustable, HP-IC

SH 32	48-109656R 343-810100R87	IC 80 bar
SH 32	48-109656L 343-810100L87	IC 80 bar

© WTO Werkzeug-Einrichtungen GmbH * Subject to change without notice * www.wto-tools.com

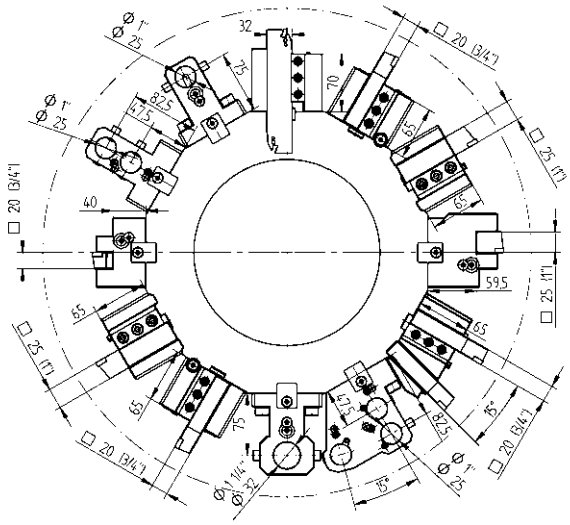

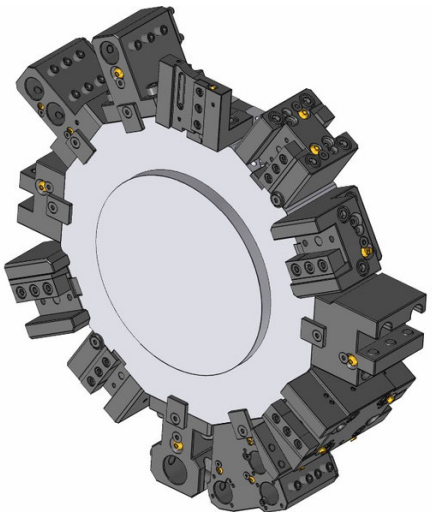

Static Toolholders - Enhanced Program

Combination toolholder, double

Ø 25	48-108596	IC 80 bar
Ø 1"	48-108597	IC 80 bar

Combination toolholder, universal, triple, 24 station (only for turret size 340)

Ø 25	48-108462	IC 80 bar
Ø 1"	48-108599	IC 80 bar

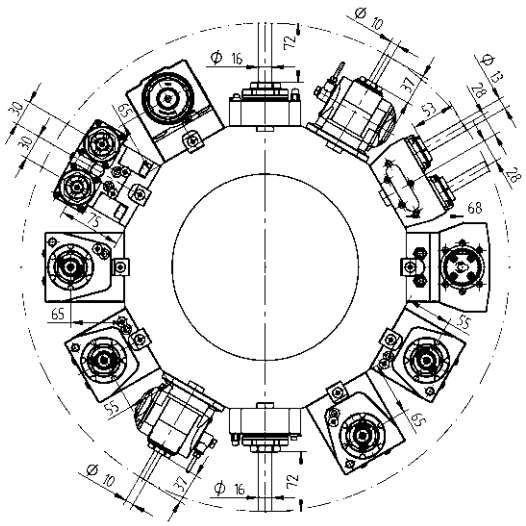

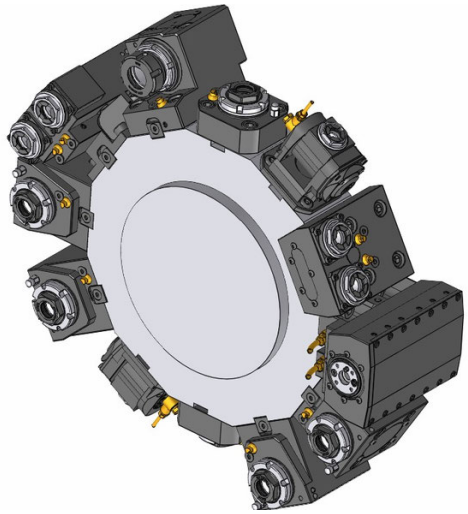

Driven Toolholders - QuickFlex®

Straight drill/milling unit

ER-25 QF	420125022-55	1:1	EC
	0067725000		
ER-25 QF	420125023-55	1:1	IC 80 bar
	0067725000		

Right angle drill/milling unit, LF=55

ER-25 QF	420525087-55	1:1	EC
	0067725000		
ER-25 QF	420525088-55	1:1	IC 80 bar
	0067725000		

Right angle drill/milling unit, LF=65

ER-25 QF	420525085-55	1:1	EC
	0067725000		
ER-25 QF	420525086-55	1:1	IC 80 bar
	0067725000		

Right angle drill/milling unit, both sides, LF=55

ER-25 QF	420525069-55	1:1	EC
	0067725000		

Right angle drill/milling unit, both sides, LF=65

ER-25 QF	420525077-55	1:1	EC
	0067725000		

Driven Toolholders - Enhanced Program

Straight drill/milling unit

ER 32	410120002-55	1:1	EC
	0067825000		
ER 32	410120003-55	1:1	IC 80 bar
	0067825000		

Straight milling unit

Ø 22	410222002-55	1:1	EC
	00675000483		
Ø 3/4"	410219000-55	1:1	EC
	00675000854		

Straight offset drill/milling unit

ER 25	410116027-55	1:1	EC
	00675000932		
ER 25	410116028-55	1:1	IC 80 bar
	00675000932		
ER 20	410113006-55	1:2	EC
	00675000939		
ER 20	410113004-55	1:2	IC 80 bar
	00675000939		
ER 16	410410000-55	1:3	EC
	00675000937		
ER 16	410410001-55	1:3	IC 80 bar
	00675000937		
ER 25	410116021-55	2:1	EC
	00675000932		
ER 25	410116022-55	2:1	IC 80 bar
	00675000932		

© WTO Werkzeug-Einrichtungen GmbH * Subject to change without notice * www.wto-tools.com

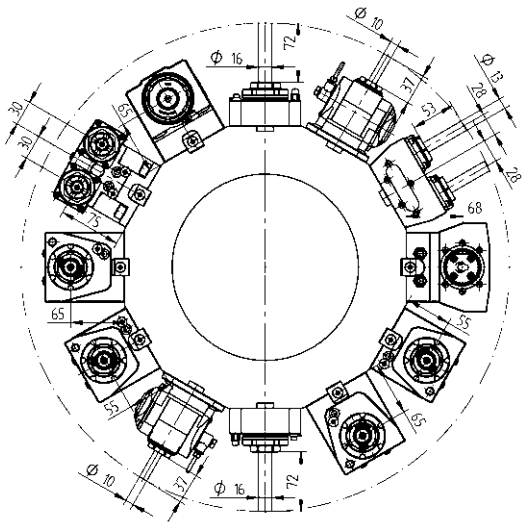

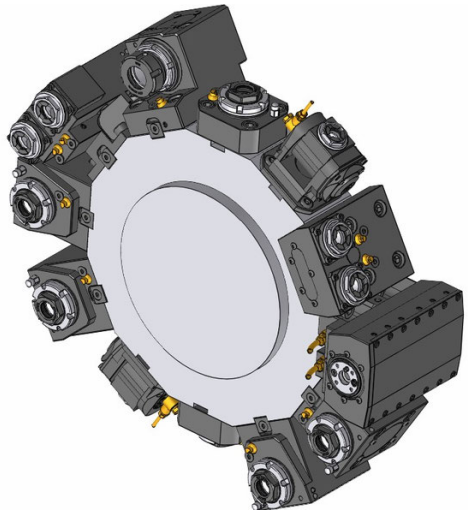

Driven Toolholders - Enhanced Program

Right angle drill/milling unit, LF=65

ER 32	410520045-55	1:1	EC
	0067825000		
ER 32	410520046-55	1:1	IC 80 bar
	0067825000		
ER-20 QF	420520029-55	1:2	EC
	0067720001		
ER-20 QF	420520030-55	1:2	IC 80 bar
	0067720001		
ER 16	410810022-55	1:3	EC
	00675000841		
ER 16	410810023-55	1:3	IC 80 bar
	00675000841		
ER-25 QF	420525055-55	2:1	EC
	0067725000		
ER-25 QF	420525056-55	2:1	IC 80 bar
	0067725000		

Right angle milling unit with combination mill arbor DIN 6358, LF=65

Ø 22	410622013-55	1:1	EC
	00675000483		
Ø 22	410622007-55	2:1	EC
	00675000483		
Ø 3/4"	410619008-55	1:1	EC
	00675000483		

Driven Toolholders - Enhanced Program

Right angle back set drill/milling unit, LF=65

ER 32	410520007-55	1:1	EC
	00675000592		
ER 32	410520008-55	1:1	IC 80 bar
	00675000592		
ER 32	410520009-55	2:1	EC
	00675000592		
ER 32	410520010-55	2:1	IC 80 bar
	00675000592		

Adjustable angle drill/milling unit

ER 16	411010001-55	1:1	EC
	00675000902		
ER 16	411010002-55	1:1	IC 80 bar
	00675000902		
ER 11	411007003-55	1:2	EC
	00675000914		
ER 11	411007004-55	1:2	IC 80 bar
	00675000914		

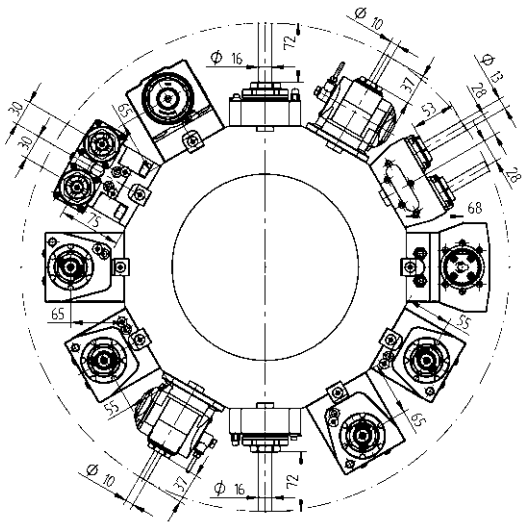

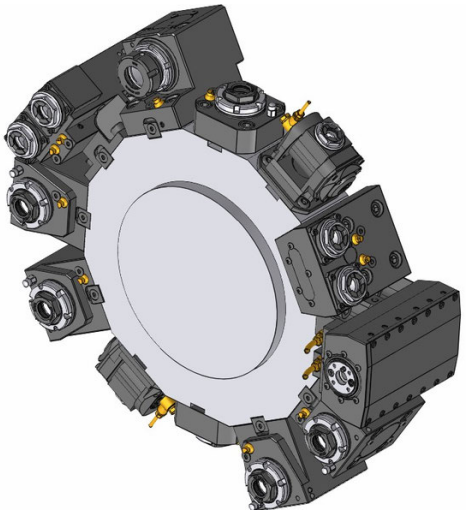

Driven Toolholders - Enhanced Program

Slitting saw unit

Type 14-2 411500000-55 2.73:1 EC

00675000489

160016142 Ø 16

160022142 Ø 22

160027142 Ø 27

160015142 Ø 5/8"

160019142 Ø 3/4"

160023142 Ø 7/8"

160025142 Ø 1"

Straight drill/milling unit, double, Y axis

ER 20 413002001-55 1:1 EC

00675000944

2-spindle - Right angle drill/milling unit, Y axis

ER 20 413502012-55 1:1 EC

00675000944

Broaching unit for ID and OD

TN765050 414532003-55 1:1 EC

© WTO Werkzeug-Einrichtungen GmbH * Subject to change without notice * www.wto-tools.com

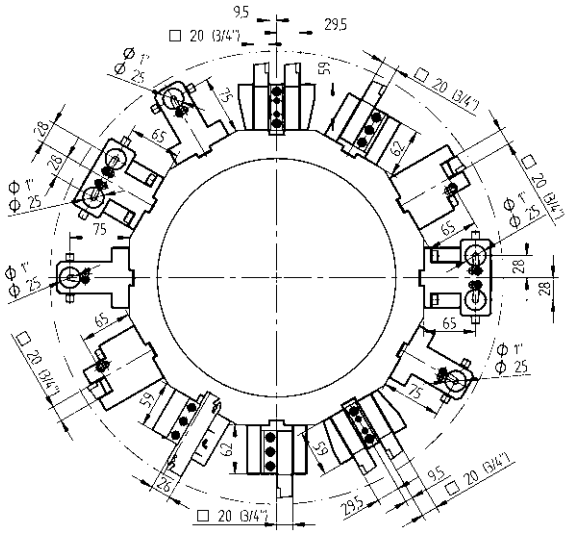

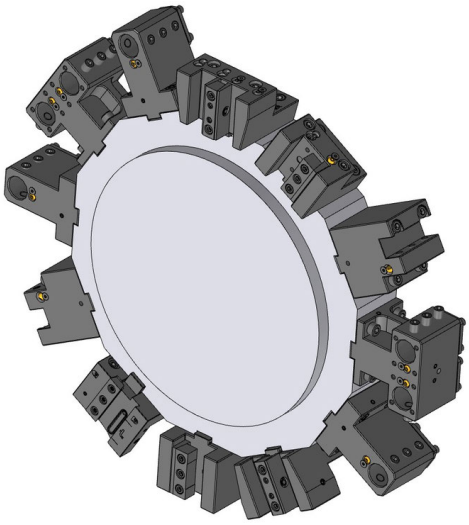

Static Toolholders - Standard Program

OD cutting holder

20	48-101470	
3/4"	48-104496	

OD cutting holder, HP-IC

20	48-101470-HP	IC 80 bar
3/4"	48-104496-HP	IC 80 bar

OD cutting holder, both sides

20	48-101471	
3/4"	48-104755	

Face cutting holder

20	48-102352	
3/4"	48-104735	

Combination toolholder, LF=75

Ø 25	48-101472	
Ø 1"	48-104526	

Static Toolholders - Enhanced Program

OD cutting holder, double, Y axis

20	48-101473	
3/4"	48-104523	

Cut-off holder

SH 26	48-100419	

Cut-off holder, HP-IC

SH 26	48-102274R	IC 80 bar
SH 26	48-102274L	IC 80 bar
SH 32	48-112233R 343-810100R95	IC 80 bar
SH 32	48-112233L 343-810100L95	IC 80 bar

Combination toolholder, universal, double, Y axis

Ø 25	48-101474	
Ø 1"	48-104528	

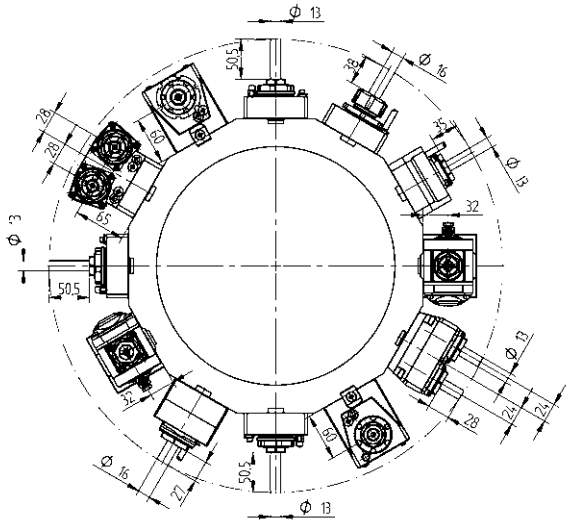

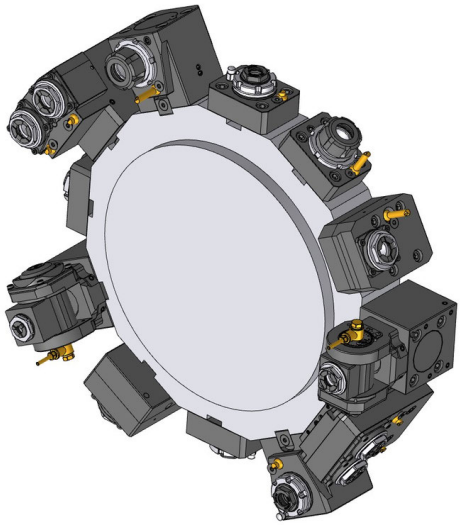

Driven Toolholders - QuickFlex®

Straight drill/milling unit

ER-20 QF	420120010-44	1:1	EC
	0067720000		
ER-20 QF	420120011-44	1:1	IC 80 bar
	0067720000		

Right angle drill/milling unit, LF=60

ER-20 QF	420520010-44	1:1	EC
	0067720000		
ER-20 QF	420520011-44	1:1	IC 80 bar
	0067720000		

Right angle drill/milling unit, LF=75

ER-20 QF	420520015-44	1:1	EC
	0067720000		
ER-20 QF	420520016-44	1:1	IC 80 bar
	0067720000		

Driven Toolholders - Enhanced Program

Straight drill/milling unit

ER 25	410116004-44	1:1	EC
	00675000720		
ER 25	410116002-44	1:1	IC 80 bar
	00675000720		

Straight offset drill/milling unit

ER 20	410113004-44	1:2	EC
	00675000939		
ER 16	410110002-44	1:3	EC
	00675000937		
ER 25	410116005-44	1.5:1	EC
	00675000932		

© WTO Werkzeug-Einrichtungen GmbH * Subject to change without notice * www.wto-tools.com

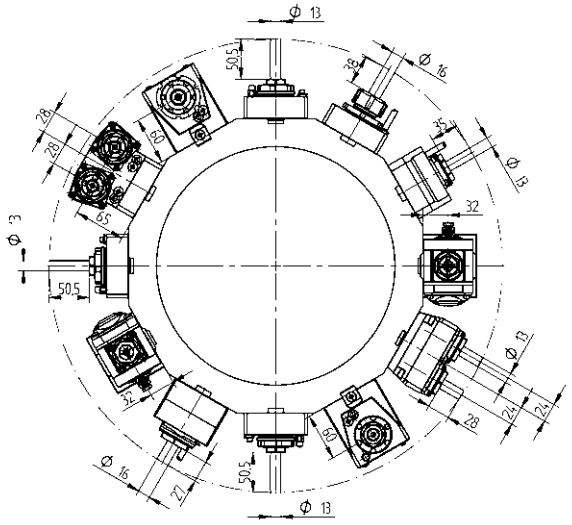

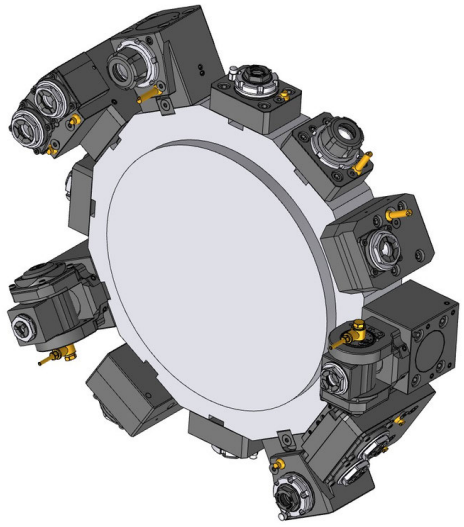

Driven Toolholders - Enhanced Program

Right angle drill/milling unit, LF=60

ER 25	410516005-44	1:1	EC
	00675000720		
ER 25	410516006-44	1:1	IC 80 bar
	00675000720		
ER 20	410513002-44	1:2	EC
	00675000833		
ER 20	410513003-44	1:2	IC 80 bar
	00675000833		
ER 16	410810006-44	1:3	EC
	00675000841		
ER 16	410810007-44	1:3	IC 80 bar
	00675000841		
ER 25	410516002-44	2:1	EC
	00675000720		
ER 25	410516003-44	2:1	IC 80 bar
	00675000720		

Right angle drill/milling unit, LF=75

ER 25	410516007-44	1:1	EC
	00675000720		
ER 25	410516008-44	1:1	IC 80 bar
	00675000720		

Right angle milling unit with combination mill arbor DIN 6358, LF=60

Ø 22	410622000-44	1:1	EC
	00675000483		
Ø 22	410622001-44	2:1	EC
	00675000483		

Driven Toolholders - Enhanced Program

Adjustable angle drill/milling unit, LF=32

ER 16	411010004-44	1:1	EC
	00675000902		
ER 16	411010005-44	1:1	IC 80 bar
	00675000902		
ER 11	411007006-44	1:2	EC
	00675000914		
ER 11	411007007-44	1:2	IC 80 bar
	00675000914		

Straight drill/milling unit, double, Y axis

ER 20	413002003-44	1:1	EC
	00675000939		
ER 20	413002004-44	1:1	IC 80 bar
	00675000939		

2-spindle - Right angle drill/milling unit, Y axis

ER 20	413502004-44	1:1	EC
	00675000939		
ER 20	413502005-44	1:1	IC 80 bar
	00675000939		

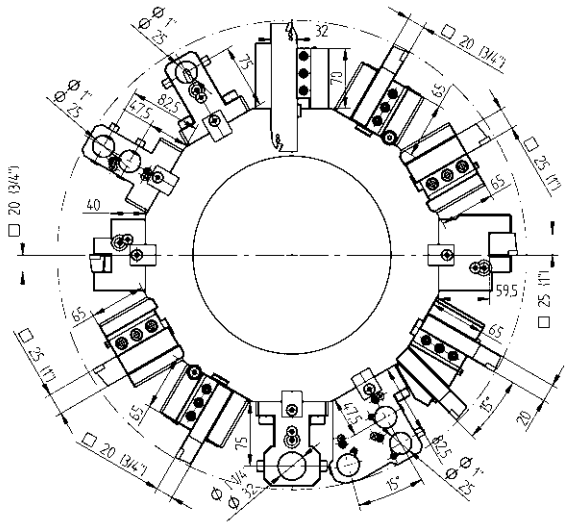

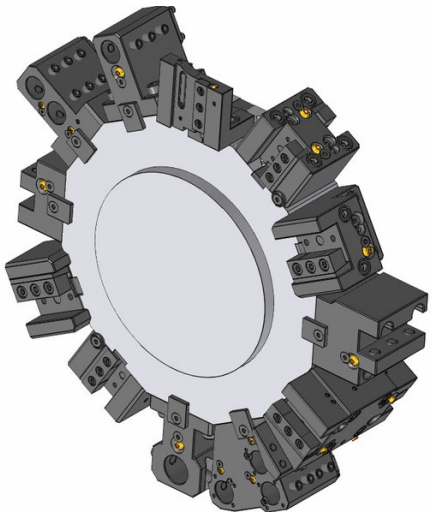

Static Toolholders - Standard Program

OD cutting holder

20	48-108585	
3/4"	48-108586	
25	48-106720	

OD cutting holder, HP-IC

25	48-106720-HP	IC 80 bar
1"	48-106730-HP	IC 80 bar

OD cutting holder, both sides

20	48-108460
3/4"	48-108588

Face cutting holder

20	48-108590
3/4"	48-108591

Face cutting holder

25	48-107758
1"	48-107759

Combination toolholder

Ø 25	48-107842	IC 80 bar
Ø 1"	48-107879	IC 80 bar
Ø 32	48-106727	IC 80 bar
Ø 1 1/4"	48-106734	IC 80 bar

Static Toolholders - Enhanced Program

OD cutting holder, double,
24 station (only for turret size 340)

20	48-108592	EC
3/4"	48-108593	EC

OD cutting holder, both sides, double,
24 station (only for turret size 340)

20	48-108461	EC
3/4"	48-108595	EC

Cut-off holder

SH 32	48-99637

Cut-off holder, HP-IC

SH 32	48-102276R	IC 80 bar
SH 32	48-102276L	IC 80 bar

Cut-off holder, adjustable

SH 32	48-110366	EC

Cut-off holder, adjustable, HP-IC

SH 32	48-109656R 343-810100R87	IC 80 bar
SH 32	48-109656L 343-810100L87	IC 80 bar

© WTO Werkzeug-Einrichtungen GmbH * Subject to change without notice * www.wto-tools.com

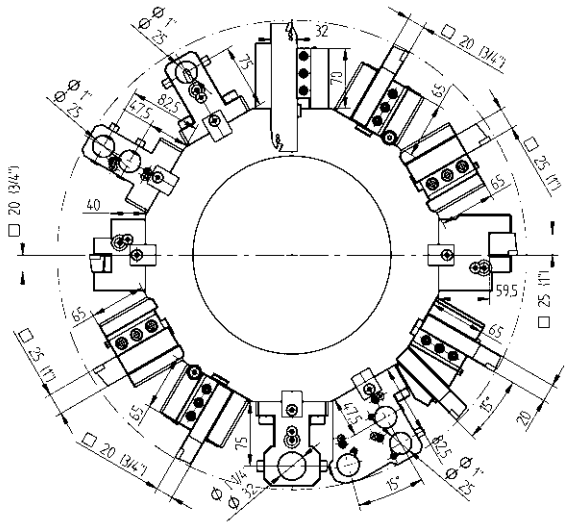

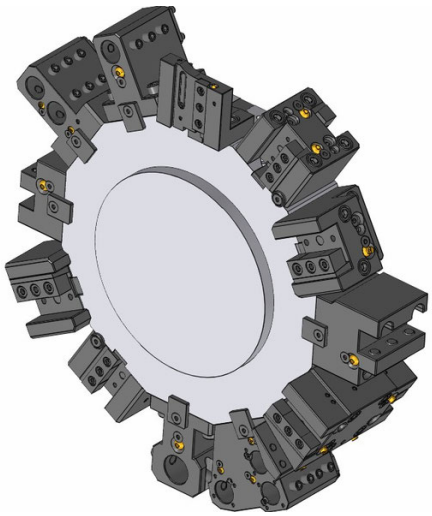

Static Toolholders - Enhanced Program

Combination toolholder, double

Ø 25	48-108596	IC 80 bar
Ø 1"	48-108597	IC 80 bar

Combination toolholder, universal, triple, 24 station (only for turret size 340)

Ø 25	48-108462	IC 80 bar
Ø 1"	48-108599	IC 80 bar

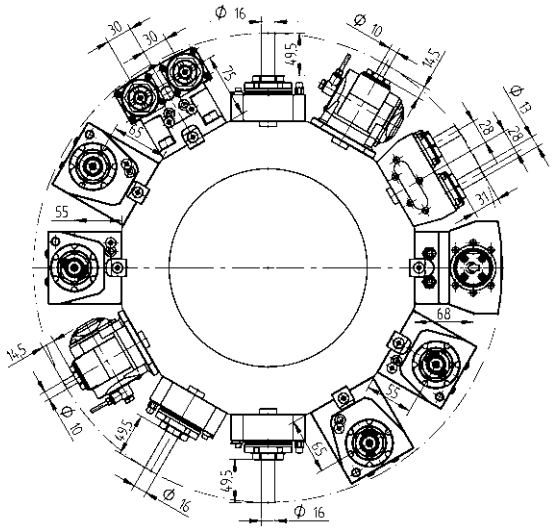

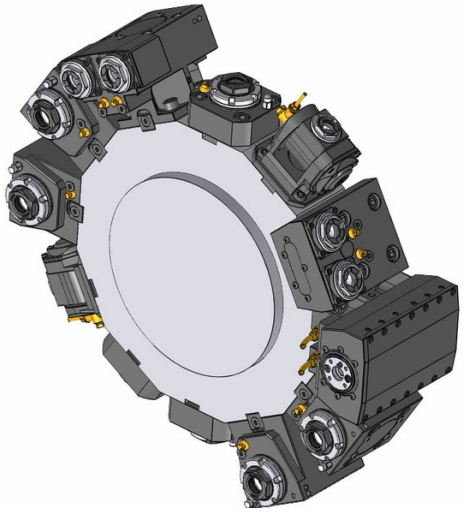

Driven Toolholders - QuickFlex®

Straight drill/milling unit

ER-25 QF	420125022-55	1:1	EC
	0067725000		
ER-25 QF	420125023-55	1:1	IC 80 bar
	0067725000		

Right angle drill/milling unit, LF=55

ER-25 QF	420525087-55	1:1	EC
	0067725000		
ER-25 QF	420525088-55	1:1	IC 80 bar
	0067725000		

Right angle drill/milling unit, LF=65

ER-25 QF	420525085-55	1:1	EC
	0067725000		
ER-25 QF	420525086-55	1:1	IC 80 bar
	0067725000		

Right angle drill/milling unit, both sides, LF=55

ER-25 QF	420525069-55	1:1	EC
	0067725000		

Right angle drill/milling unit, both sides, LF=65

ER-25 QF	420525077-55	1:1	EC
	0067725000		

Driven Toolholders - Enhanced Program

Straight drill/milling unit

ER 32	410120002-55	1:1	EC
	0067825000		
ER 32	410120003-55	1:1	IC 80 bar
	0067825000		

Straight milling unit

Ø 22	410222002-55	1:1	EC
	00675000483		
Ø 3/4"	410219000-55	1:1	EC
	00675000854		

Straight offset drill/milling unit

ER 25	410116027-55	1:1	EC
	00675000932		
ER 25	410116028-55	1:1	IC 80 bar
	00675000932		
ER 20	410113006-55	1:2	EC
	00675000939		
ER 20	410113004-55	1:2	IC 80 bar
	00675000939		
ER 16	410410000-55	1:3	EC
	00675000937		
ER 16	410410001-55	1:3	IC 80 bar
	00675000937		
ER 25	410116021-55	2:1	EC
	00675000932		
ER 25	410116022-55	2:1	IC 80 bar
	00675000932		

© WTO Werkzeug-Einrichtungen GmbH * Subject to change without notice * www.wto-tools.com

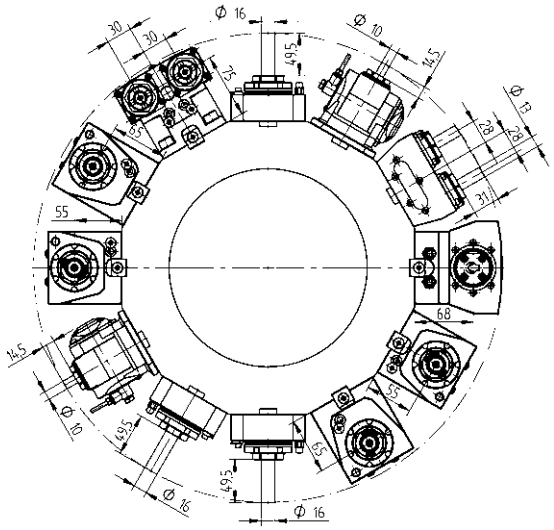

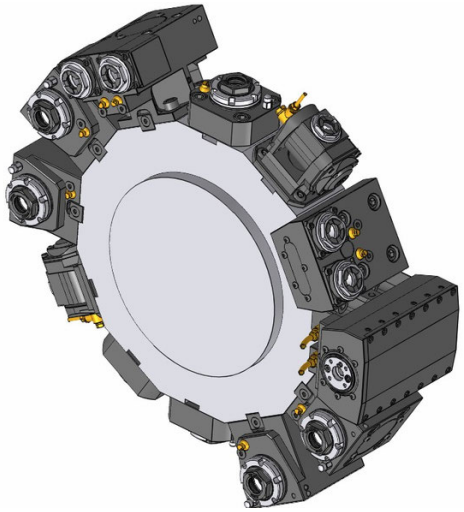

Driven Toolholders - Enhanced Program

Right angle drill/milling unit, LF=65

ER 32	410520045-55	1:1	EC
	0067825000		
ER 32	410520046-55	1:1	IC 80 bar
	0067825000		
ER-20 QF	420520029-55	1:2	EC
	0067720001		
ER-20 QF	420520030-55	1:2	IC 80 bar
	0067720001		
ER 16	410810022-55	1:3	EC
	00675000841		
ER 16	410810023-55	1:3	IC 80 bar
	00675000841		
ER-25 QF	420525055-55	2:1	EC
	0067725000		
ER-25 QF	420525056-55	2:1	IC 80 bar
	0067725000		

Right angle milling unit with combination mill arbor DIN 6358, LF=65

Ø 22	410622013-55	1:1	EC
	00675000483		
Ø 22	410622007-55	2:1	EC
	00675000483		
Ø 3/4"	410619008-55	1:1	EC
	00675000483		

Driven Toolholders - Enhanced Program

Adjustable angle drill/milling unit

ER 16	411010001-55	1:1	EC
	00675000902		
ER 16	411010002-55	1:1	IC 80 bar
	00675000902		
ER 11	411007003-55	1:2	EC
	00675000914		
ER 11	411007004-55	1:2	IC 80 bar
	00675000914		

Straight drill/milling unit, double, Y axis

ER 20	413002001-55	1:1	EC
	00675000944		

2-spindle - Right angle drill/milling unit, Y axis

ER 20	413502012-55	1:1	EC
	00675000944		

Broaching unit for ID and OD

TN765050	414532003-55	1:1	EC

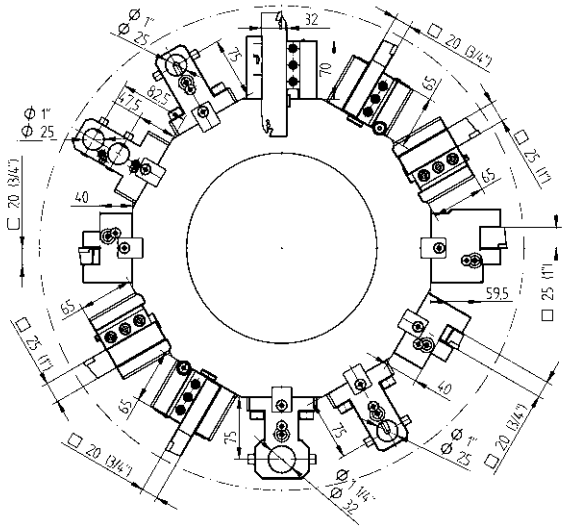

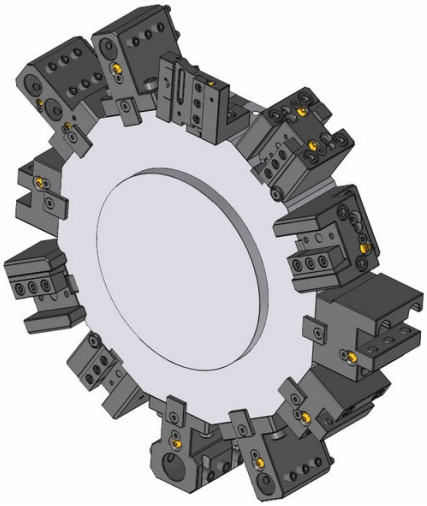

Static Toolholders - Standard Program

OD cutting holder

20	48-108585	
3/4"	48-108586	
25	48-106720	

OD cutting holder, HP-IC

25	48-106720-HP	IC 80 bar
1"	48-106730-HP	IC 80 bar

OD cutting holder, both sides

20	48-108460	
3/4"	48-108588	

Face cutting holder

20	48-108590	
3/4"	48-108591	

Face cutting holder

25	48-107758	
1"	48-107759	

Combination toolholder

Ø 25	48-107842	IC 80 bar
Ø 1"	48-107879	IC 80 bar
Ø 32	48-106727	IC 80 bar
Ø 1 1/4"	48-106734	IC 80 bar

Static Toolholders - Enhanced Program

Cut-off holder

SH 32	48-99637	

Cut-off holder, HP-IC

SH 32	48-102276R	IC 80 bar
SH 32	48-102276L	IC 80 bar

Cut-off holder, adjustable

SH 32	48-110366	EC

Cut-off holder, adjustable, HP-IC

SH 32	48-109656R 343-810100R87	IC 80 bar
SH 32	48-109656L 343-810100L87	IC 80 bar

Combination toolholder, double

Ø 25	48-108596	IC 80 bar
Ø 1"	48-108597	IC 80 bar

© WTO Werkzeug-Einrichtungen GmbH * Subject to change without notice * www.wto-tools.com

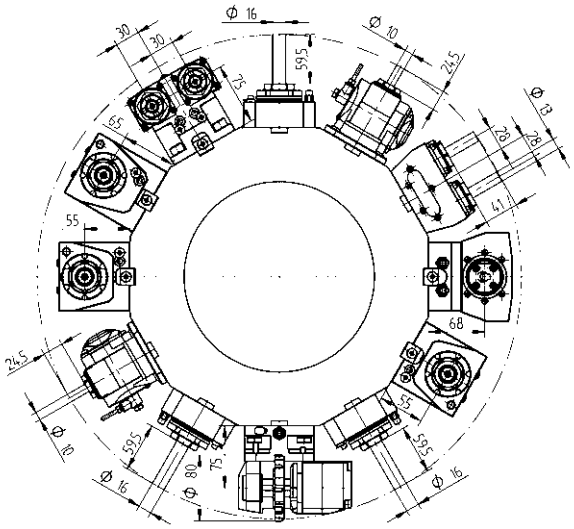

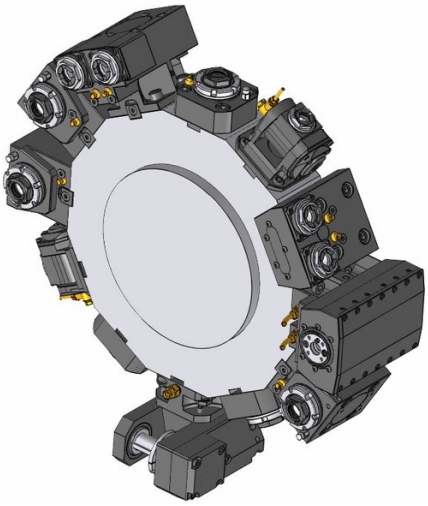

Driven Toolholders - QuickFlex®

Straight drill/milling unit

ER-25 QF	420125022-55	1:1	EC
	0067725000		
ER-25 QF	420125023-55	1:1	IC 80 bar
	0067725000		

Right angle drill/milling unit, LF=55

ER-25 QF	420525087-55	1:1	EC
	0067725000		
ER-25 QF	420525088-55	1:1	IC 80 bar
	0067725000		

Right angle drill/milling unit, LF=65

ER-25 QF	420525085-55	1:1	EC
	0067725000		
ER-25 QF	420525086-55	1:1	IC 80 bar
	0067725000		

Right angle drill/milling unit, both sides, LF=55

ER-25 QF	420525069-55	1:1	EC
	0067725000		

Right angle drill/milling unit, both sides, LF=65

ER-25 QF	420525077-55	1:1	EC
	0067725000		

Driven Toolholders - Enhanced Program

Straight drill/milling unit

ER 32	410120002-55	1:1	EC
	0067825000		
ER 32	410120003-55	1:1	IC 80 bar
	0067825000		

Straight milling unit

Ø 22	410222002-55	1:1	EC
	00675000483		
Ø 3/4"	410219000-55	1:1	EC
	00675000854		

Straight offset drill/milling unit

ER 25	410116027-55	1:1	EC
	00675000932		
ER 25	410116028-55	1:1	IC 80 bar
	00675000932		
ER 20	410113006-55	1:2	EC
	00675000939		
ER 20	410113004-55	1:2	IC 80 bar
	00675000939		
ER 16	410410000-55	1:3	EC
	00675000937		
ER 16	410410001-55	1:3	IC 80 bar
	00675000937		
ER 25	410116021-55	2:1	EC
	00675000932		
ER 25	410116022-55	2:1	IC 80 bar
	00675000932		

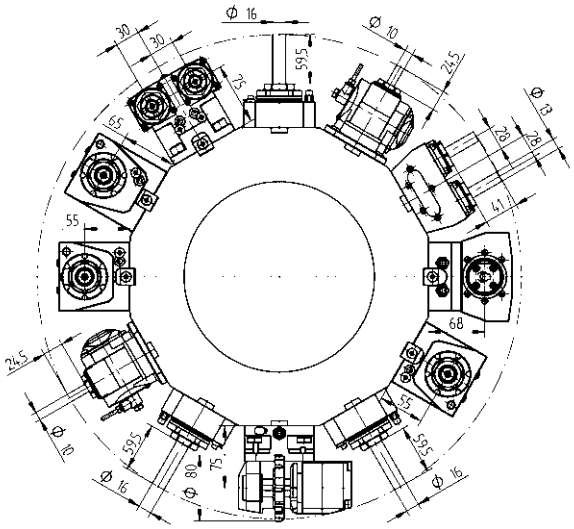

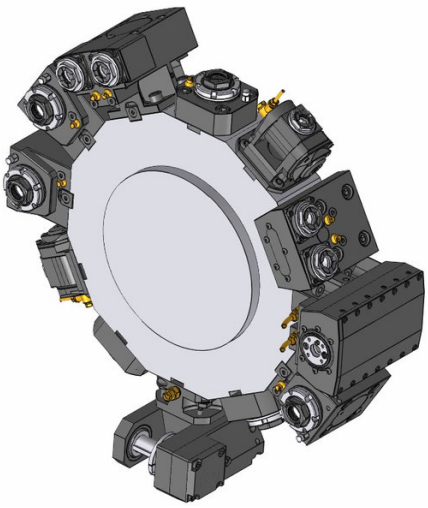

Driven Toolholders - Enhanced Program

Right angle drill/milling unit, LF=65

ER 32	410520045-55 0067825000	1:1	EC
ER 32	410520046-55 0067825000	1:1	IC 80 bar
ER-20 QF	420520029-55 0067720001	1:2	EC
ER-20 QF	420520030-55 0067720001	1:2	IC 80 bar
ER 16	410810022-55 00675000841	1:3	EC
ER 16	410810023-55 00675000841	1:3	IC 80 bar
ER-25 QF	420525055-55 0067725000	2:1	EC
ER-25 QF	420525056-55 0067725000	2:1	IC 80 bar

Right angle milling unit with combination mill arbor DIN 6358, LF=65

Ø 22	410622013-55 00675000483	1:1	EC
Ø 22	410622007-55 00675000483	2:1	EC
Ø 3/4"	410619008-55 00675000483	1:1	EC

Driven Toolholders - Enhanced Program

Right angle back set drill/milling unit, LF=65

ER 32	410520007-55 00675000592	1:1	EC
ER 32	410520008-55 00675000592	1:1	IC 80 bar
ER 32	410520009-55 00675000592	2:1	EC
ER 32	410520010-55 00675000592	2:1	IC 80 bar

Adjustable angle drill/milling unit

ER 16	411010001-55 00675000902	1:1	EC
ER 16	411010002-55 00675000902	1:1	IC 80 bar
ER 11	411007003-55 00675000914	1:2	EC
ER 11	411007004-55 00675000914	1:2	IC 80 bar

© WTO Werkzeug-Einrichtungen GmbH * Subject to change without notice * www.wto-tools.com

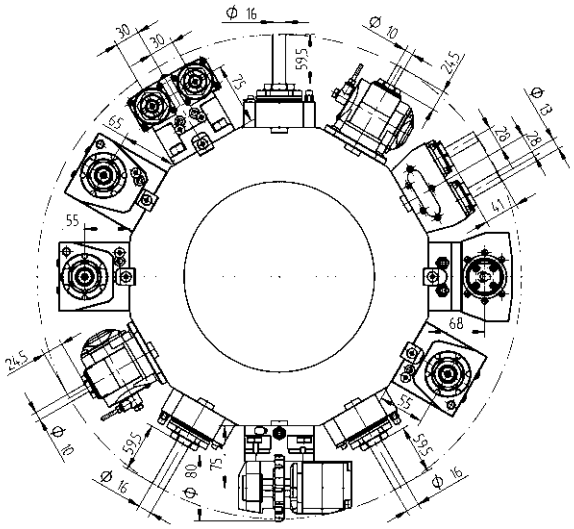

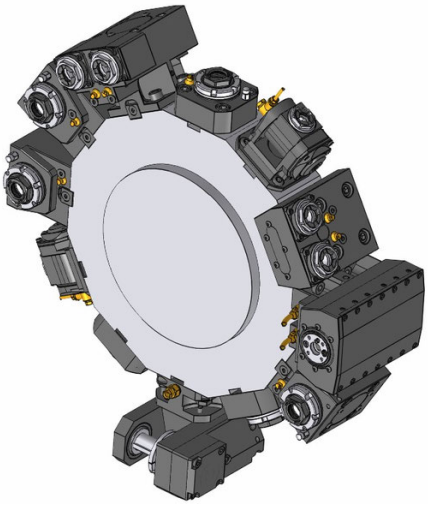

Driven Toolholders - Enhanced Program

Slitting saw unit

Type 14-2 411500000-55 2.73:1 EC

00675000489

160016142 Ø 16

160022142 Ø 22

160027142 Ø 27

160015142 Ø 5/8"

160019142 Ø 3/4"

160023142 Ø 7/8"

160025142 Ø 1"

Straight drill/milling unit, double, Y axis

ER 20 413002001-55 1:1 EC

00675000944

2-spindle - Right angle drill/milling unit, Y axis

ER 20 413502012-55 1:1 EC

00675000944

Broaching unit for ID and OD

TN765050 414532003-55 1:1 EC

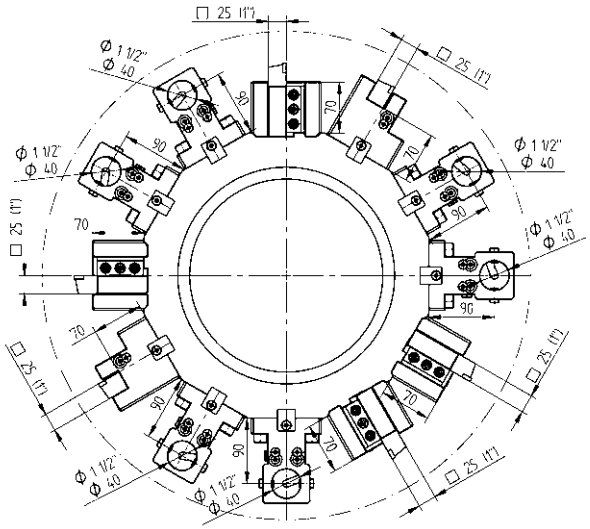

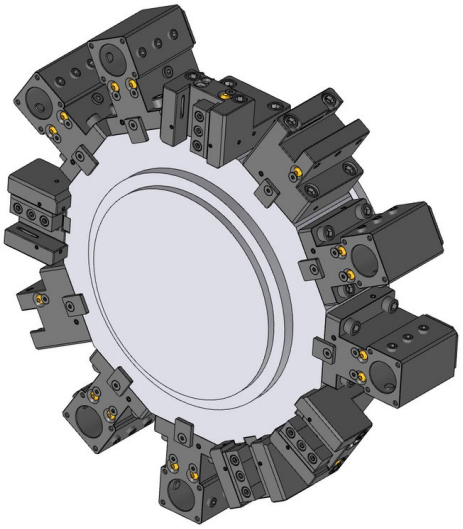

Static Toolholders - Standard Program

OD cutting holder, HP-IC

25	48-107657-HP	IC 80 bar
1"	48-107658-HP	IC 80 bar

OD cutting holder, both sides, HP-IC

25	48-114828-HP	IC 80 bar
1"	48-114829-HP	IC 80 bar

Face cutting holder, HP-IC

25	48-113236-HP	IC 80 bar
1"	48-113237-HP	IC 80 bar

Combination toolholder

Ø 40 48-107659

241140020 ER32

241140026 ER40

Ø 1 1/2" 48-107660

2411150020 ER32

Static Toolholders - Enhanced Program

Cut-off holder

SH 32	48-100204	

Cut-off holder, HP-IC

SH 32	48-102279R	IC 80 bar
SH 32	48-102279L	IC 80 bar

© WTO Werkzeug-Einrichtungen GmbH * Subject to change without notice * www.wto-tools.com

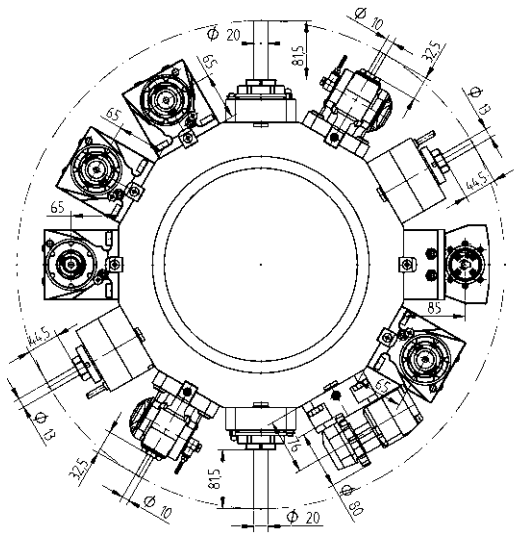

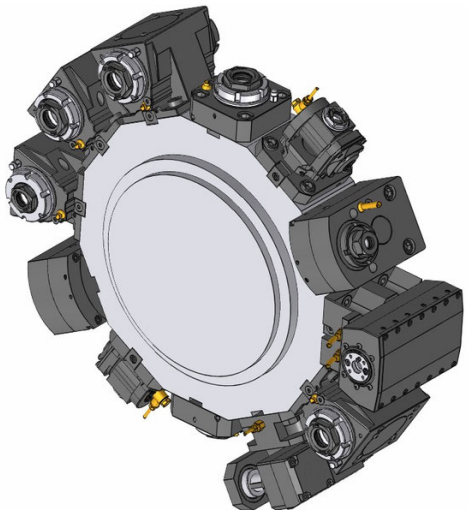

Driven Toolholders - QuickFlex®

Straight drill/milling unit

ER-32 QF	420132019-65	1:1	EC
	0067732000		
ER-32 QF	420132020-65	1:1	IC 80 bar
	0067732000		

Right angle drill/milling unit

ER-32 QF	420532025-65	1:1	EC
	0067732000		
ER-32 QF	420532026-65	1:1	IC 80 bar
	0067732000		

Right angle drill/milling unit, both sides

ER-32 QF	420532043-65	1:1	EC
	0067732000		

Driven Toolholders - Enhanced Program

Straight offset drill/milling unit

ER 32	410120030-65	1:1	EC
	00675000958		
ER 32	410120031-65	1:1	IC 80 bar
	00675000958		
ER 20	410113002-65	1:2	EC
	00675000591		
ER 20	410113003-65	1:2	IC 80 bar
	00675000591		

Right angle drill/milling unit

ER-25 QF	420525014-65	1:2	EC
	0067725001		
ER-25 QF	420525015-65	1:2	IC 80 bar
	0067725001		
ER-32 QF	420532031-65	2:1	EC
	0067732000		
ER-32 QF	420532032-65	2:1	IC 80 bar
	0067732000		

Adjustable angle drill/milling unit

ER 16	411010000-65	1:1	EC
	00675000902		
ER 16	411010001-65	1:1	IC 80 bar
	00675000902		
ER 11	411007001-65	1:2	EC
	00675000914		
ER 11	411007000-65	1:2	IC 80 bar
	00675000914		

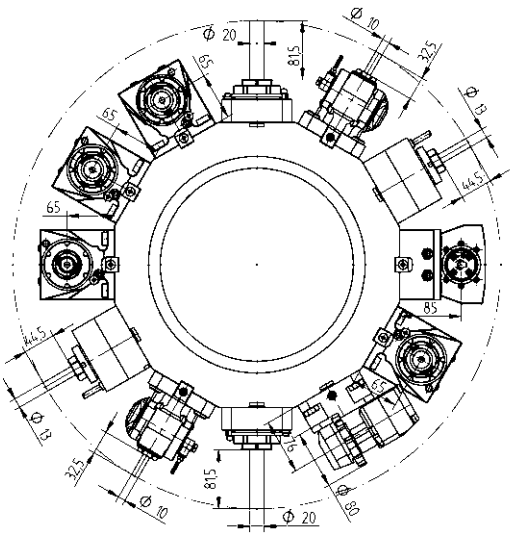

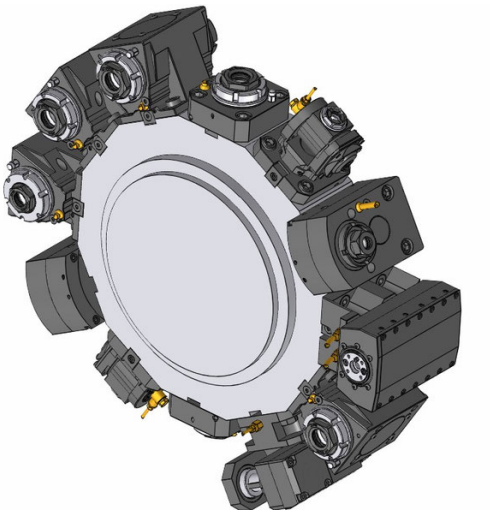

Driven Toolholders - Enhanced Program

Offset slitting saw unit

Type 14-2 411500001-65 2.73:1 EC

- 00675000448
- 160016142 Ø 16
- 160022142 Ø 22
- 160027142 Ø 27
- 160015142 Ø 5/8"
- 160019142 Ø 3/4"
- 160023142 Ø 7/8"
- 160025142 Ø 1"

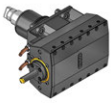

Broaching unit for ID and OD

TN765050 414532003-65 1:1 EC

© WTO Werkzeug-Einrichtungen GmbH * Subject to change without notice * www.wto-tools.com

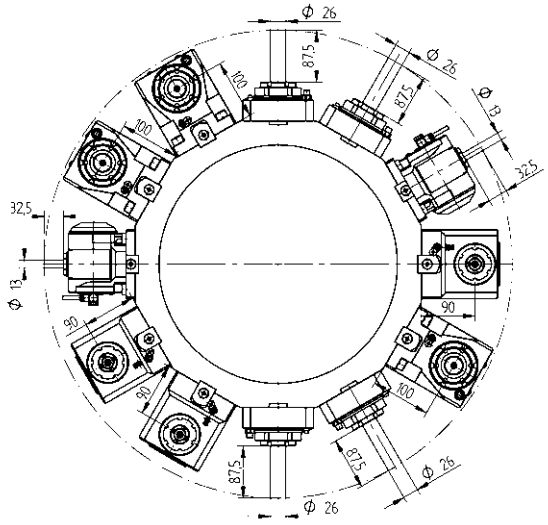

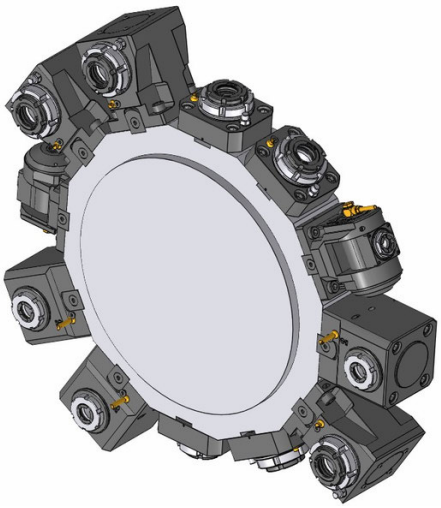

Driven Toolholders - QuickFlex®

Straight drill/milling unit

ER-40 QF	420140010-75	1:1	EC
	0067740000		
ER-40 QF	420140011-75	1:1	IC 80 bar
	0067740000		

Right angle drill/milling unit

ER-40 QF	420540010-75	1:1	EC
	0067740000		
ER-40 QF	420540011-75	1:1	IC 80 bar
	0067740000		

Driven Toolholders - Enhanced Program

Right angle drill/milling unit

ER 25	410516000-75	1:2	EC
	00675000897		
ER 25	410516001-75	1:2	IC 80 bar
	00675000897		

Adjustable angle drill/milling unit

ER 20	411013000-75	1:1	EC
	00675000928		
ER 20	411013001-75	1:1	IC 80 bar
	00675000928		
ER 16	411010000-75	1:2	EC
	00675000936		
ER 16	411010001-75	1:2	IC 80 bar
	00675000936		

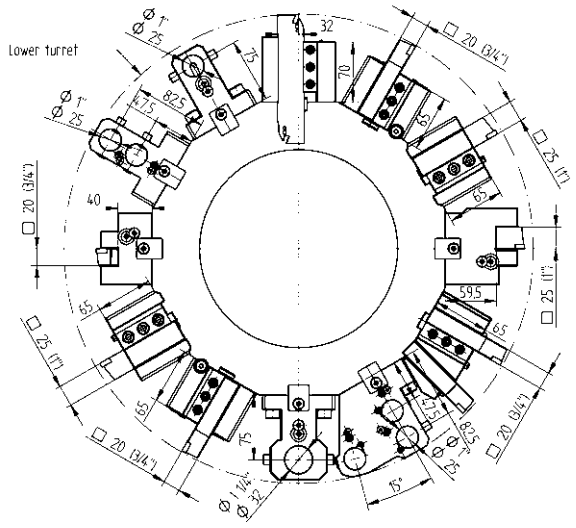

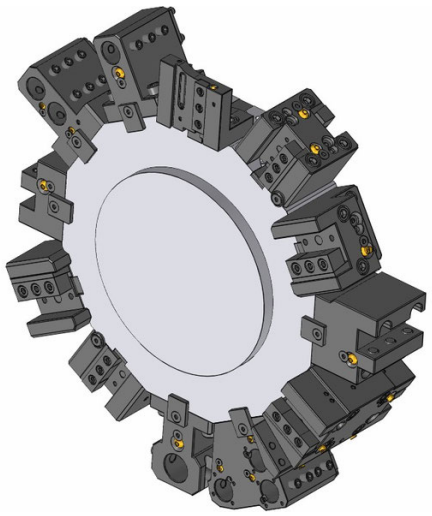

Static Toolholders - Standard Program

OD cutting holder

20	48-108585	
3/4"	48-108586	
25	48-106720	

OD cutting holder, HP-IC

25	48-106720-HP	IC 80 bar
1"	48-106730-HP	IC 80 bar

OD cutting holder, both sides

20	48-108460
3/4"	48-108588

Face cutting holder

20	48-108590
3/4"	48-108591

Face cutting holder

25	48-107758
1"	48-107759

Combination toolholder

Ø 25	48-107842	IC 80 bar
Ø 1"	48-107879	IC 80 bar
Ø 32	48-106727	IC 80 bar
Ø 1 1/4"	48-106734	IC 80 bar

Static Toolholders - Enhanced Program

OD cutting holder, double,
24 station (only for turret size 340)

20	48-108592	EC
3/4"	48-108593	EC

OD cutting holder, both sides, double,
24 station (only for turret size 340)

20	48-108461	EC
3/4"	48-108595	EC

Cut-off holder

SH 32	48-99637

Cut-off holder, HP-IC

SH 32	48-102276R	IC 80 bar
SH 32	48-102276L	IC 80 bar

Cut-off holder, adjustable

SH 32	48-110366	EC

Cut-off holder, adjustable, HP-IC

SH 32	48-109656R 343-810100R87	IC 80 bar
SH 32	48-109656L 343-810100L87	IC 80 bar

© WTO Werkzeug-Einrichtungen GmbH * Subject to change without notice * www.wto-tools.com

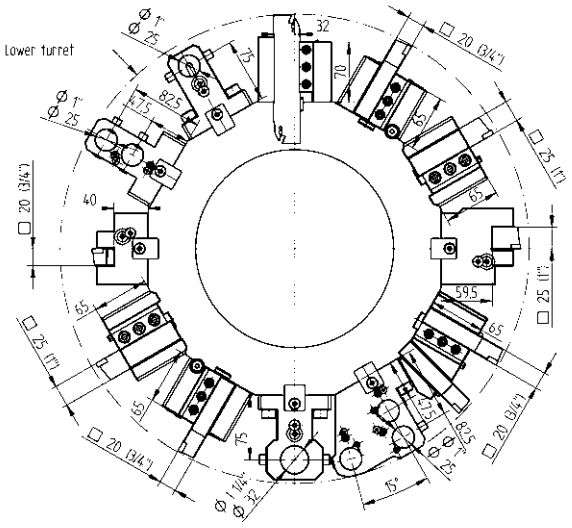

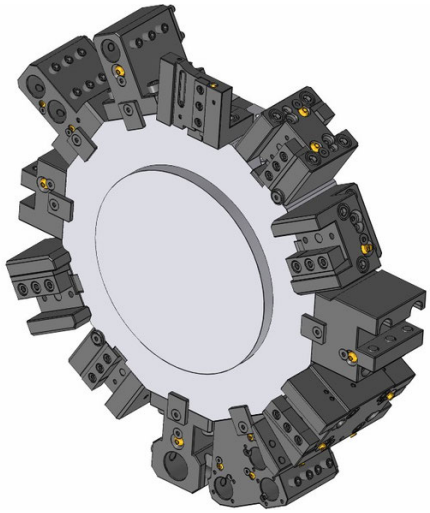

Static Toolholders - Enhanced Program

Combination toolholder, double

Ø 25	48-108596	IC 80 bar
Ø 1"	48-108597	IC 80 bar

Combination toolholder, universal, triple, 24 station (only for turret size 340)

Ø 25	48-108462	IC 80 bar
Ø 1"	48-108599	IC 80 bar

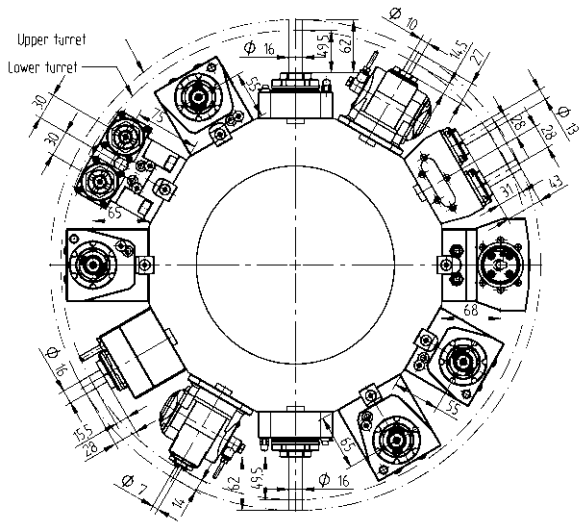

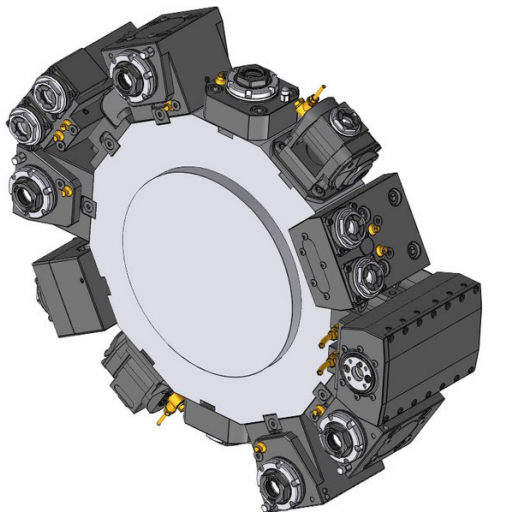

Driven Toolholders - QuickFlex®

Straight drill/milling unit

ER-25 QF	420125022-55	1:1	EC
	0067725000		
ER-25 QF	420125023-55	1:1	IC 80 bar
	0067725000		

Right angle drill/milling unit, LF=55

ER-25 QF	420525087-55	1:1	EC
	0067725000		
ER-25 QF	420525088-55	1:1	IC 80 bar
	0067725000		

Right angle drill/milling unit, LF=65

ER-25 QF	420525085-55	1:1	EC
	0067725000		
ER-25 QF	420525086-55	1:1	IC 80 bar
	0067725000		

Right angle drill/milling unit, both sides, LF=55

ER-25 QF	420525069-55	1:1	EC
	0067725000		

Right angle drill/milling unit, both sides, LF=65

ER-25 QF	420525077-55	1:1	EC
	0067725000		

Driven Toolholders - Enhanced Program

Straight drill/milling unit

ER 32	410120002-55	1:1	EC
	0067825000		
ER 32	410120003-55	1:1	IC 80 bar
	0067825000		

Straight milling unit

Ø 22	410222002-55	1:1	EC
	00675000483		
Ø 3/4"	410219000-55	1:1	EC
	00675000854		

Straight offset drill/milling unit

ER 25	410116027-55	1:1	EC
	00675000932		
ER 25	410116028-55	1:1	IC 80 bar
	00675000932		
ER 20	410113006-55	1:2	EC
	00675000939		
ER 20	410113004-55	1:2	IC 80 bar
	00675000939		
ER 16	410410000-55	1:3	EC
	00675000937		
ER 16	410410001-55	1:3	IC 80 bar
	00675000937		
ER 25	410116021-55	2:1	EC
	00675000932		
ER 25	410116022-55	2:1	IC 80 bar
	00675000932		

© WTO Werkzeug-Einrichtungen GmbH * Subject to change without notice * www.wto-tools.com

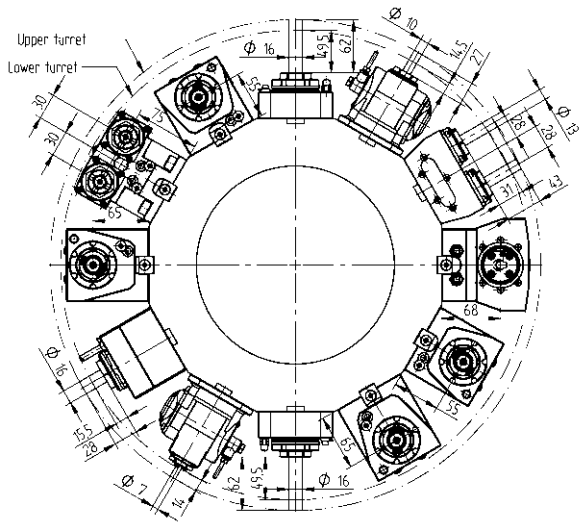

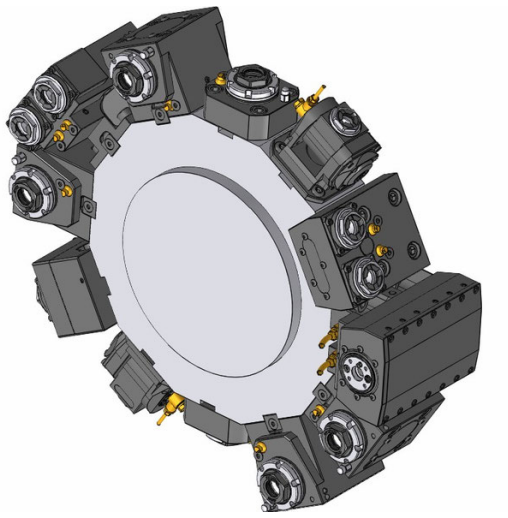

Driven Toolholders - Enhanced Program

Right angle drill/milling unit, LF=65

ER 32	410520045-55	1:1	EC
	0067825000		
ER 32	410520046-55	1:1	IC 80 bar
	0067825000		
ER-20 QF	420520029-55	1:2	EC
	0067720001		
ER-20 QF	420520030-55	1:2	IC 80 bar
	0067720001		
ER 16	410810022-55	1:3	EC
	00675000841		
ER 16	410810023-55	1:3	IC 80 bar
	00675000841		
ER-25 QF	420525055-55	2:1	EC
	0067725000		
ER-25 QF	420525056-55	2:1	IC 80 bar
	0067725000		

Right angle milling unit with combination mill arbor DIN 6358, LF=65

Ø 22	410622013-55	1:1	EC
	00675000483		
Ø 22	410622007-55	2:1	EC
	00675000483		
Ø 3/4"	410619008-55	1:1	EC
	00675000483		

Driven Toolholders - Enhanced Program

Adjustable angle drill/milling unit

ER 16	411010001-55	1:1	EC
	00675000902		
ER 16	411010002-55	1:1	IC 80 bar
	00675000902		
ER 11	411007003-55	1:2	EC
	00675000914		
ER 11	411007004-55	1:2	IC 80 bar
	00675000914		

Straight drill/milling unit, double, Y axis

ER 20	413002001-55	1:1	EC
	00675000944		

2-spindle - Right angle drill/milling unit, Y axis

ER 20	413502012-55	1:1	EC
	00675000944		

Broaching unit for ID and OD

TN765050	414532003-55	1:1	EC

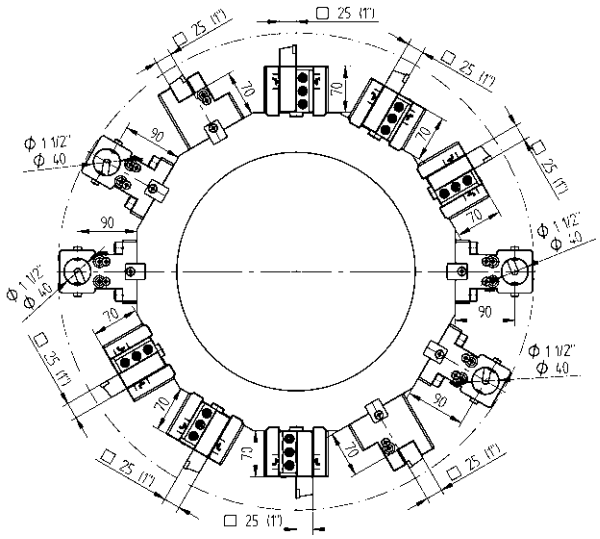

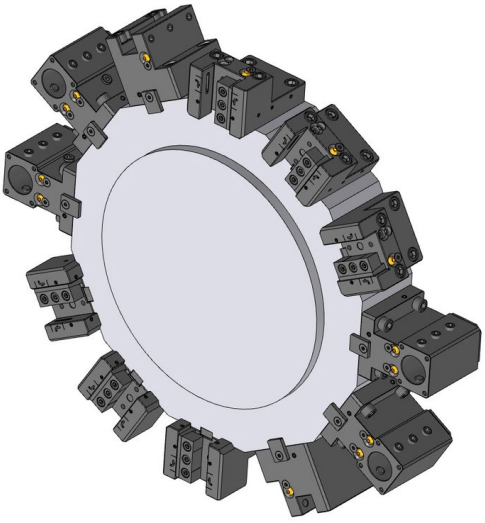

Static Toolholders - Standard Program

OD cutting holder, HP-IC

25	48-107657-HP	IC 80 bar
1"	48-107658-HP	IC 80 bar

OD cutting holder, both sides, HP-IC

25	48-114828-HP	IC 80 bar
1"	48-114829-HP	IC 80 bar

Face cutting holder, HP-IC

25	48-113236-HP	IC 80 bar
1"	48-113237-HP	IC 80 bar

Combination toolholder

Ø 40 48-107659

241140020 ER32

241140026 ER40

Ø 1 1/2" 48-107660

2411150020 ER32

Static Toolholders - Enhanced Program

Cut-off holder

SH 32	48-100204	

Cut-off holder, HP-IC

SH 32	48-102279R	IC 80 bar
SH 32	48-102279L	IC 80 bar

© WTO Werkzeug-Einrichtungen GmbH * Subject to change without notice * www.wto-tools.com

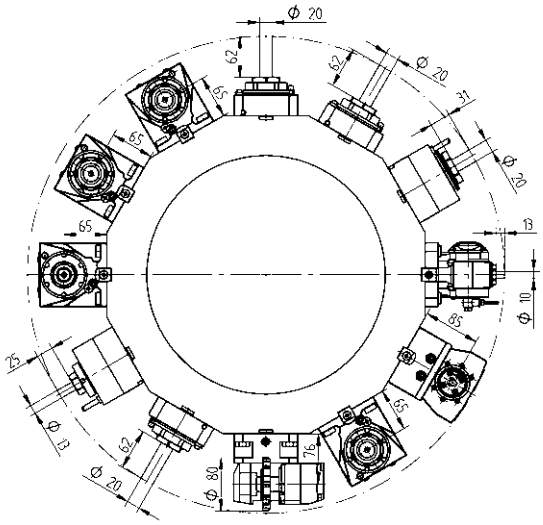

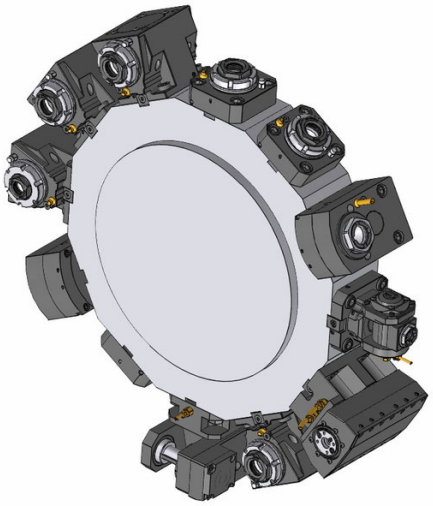

Driven Toolholders - QuickFlex®

Straight drill/milling unit

ER-32 QF	420132019-65	1:1	EC
	0067732000		
ER-32 QF	420132020-65	1:1	IC 80 bar
	0067732000		

Right angle drill/milling unit

ER-32 QF	420532025-65	1:1	EC
	0067732000		
ER-32 QF	420532026-65	1:1	IC 80 bar
	0067732000		

Right angle drill/milling unit, both sides

ER-32 QF	420532043-65	1:1	EC
	0067732000		

Driven Toolholders - Enhanced Program

Straight offset drill/milling unit

ER 32	410120030-65	1:1	EC
	00675000958		
ER 32	410120031-65	1:1	IC 80 bar
	00675000958		
ER 20	410113002-65	1:2	EC
	00675000591		
ER 20	410113003-65	1:2	IC 80 bar
	00675000591		

Right angle drill/milling unit

ER-25 QF	420525014-65	1:2	EC
	0067725001		
ER-25 QF	420525015-65	1:2	IC 80 bar
	0067725001		
ER-32 QF	420532031-65	2:1	EC
	0067732000		
ER-32 QF	420532032-65	2:1	IC 80 bar
	0067732000		

Adjustable angle drill/milling unit

ER 16	411010000-65	1:1	EC
	00675000902		
ER 16	411010001-65	1:1	IC 80 bar
	00675000902		
ER 11	411007001-65	1:2	EC
	00675000914		
ER 11	411007000-65	1:2	IC 80 bar
	00675000914		

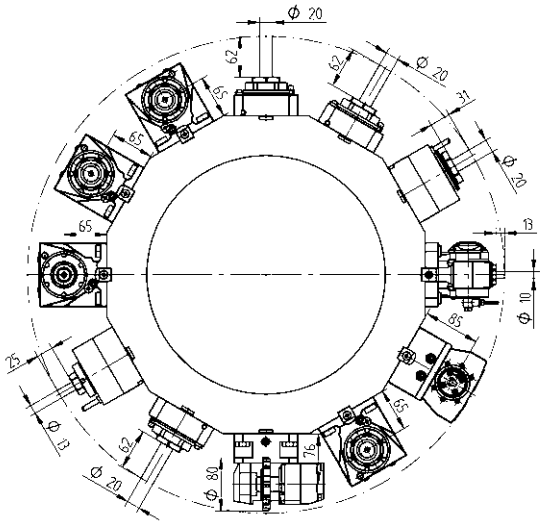

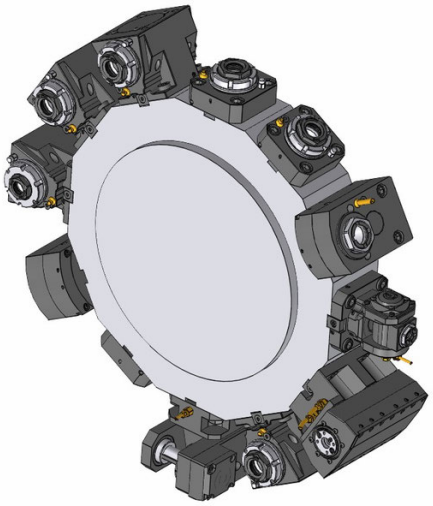

Driven Toolholders - Enhanced Program

Offset slitting saw unit

Type 14-2 411500001-65 2.73:1 EC

- 00675000448
- 160016142 Ø 16
- 160022142 Ø 22
- 160027142 Ø 27
- 160015142 Ø 5/8"
- 160019142 Ø 3/4"
- 160023142 Ø 7/8"
- 160025142 Ø 1"

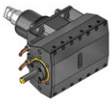

Broaching unit for ID and OD

TN765050 414532003-65 1:1 EC

© WTO Werkzeug-Einrichtungen GmbH * Subject to change without notice * www.wto-tools.com

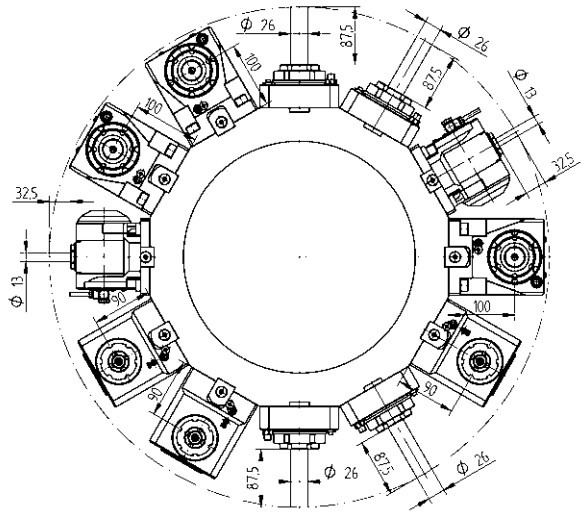

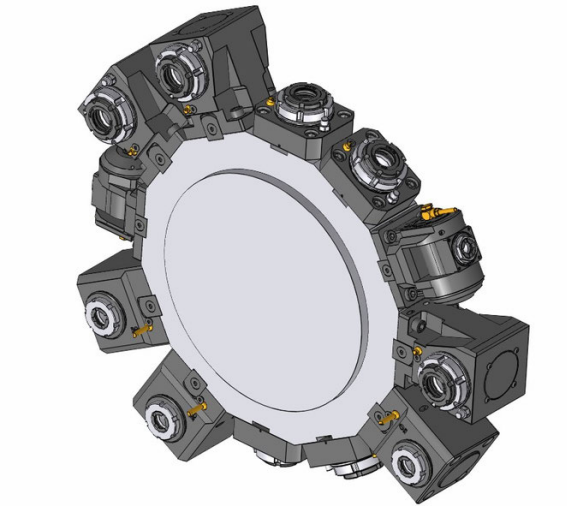

Driven Toolholders - QuickFlex®

Straight drill/milling unit

ER-40 QF	420140010-75	1:1	EC
	0067740000		
ER-40 QF	420140011-75	1:1	IC 80 bar
	0067740000		

Right angle drill/milling unit

ER-40 QF	420540010-75	1:1	EC
	0067740000		
ER-40 QF	420540011-75	1:1	IC 80 bar
	0067740000		

Driven Toolholders - Enhanced Program

Right angle drill/milling unit

ER 25	410516000-75	1:2	EC
	00675000897		
ER 25	410516001-75	1:2	IC 80 bar
	00675000897		

Adjustable angle drill/milling unit

ER 20	411013000-75	1:1	EC
	00675000928		
ER 20	411013001-75	1:1	IC 80 bar
	00675000928		
ER 16	411010000-75	1:2	EC
	00675000936		
ER 16	411010001-75	1:2	IC 80 bar
	00675000936		

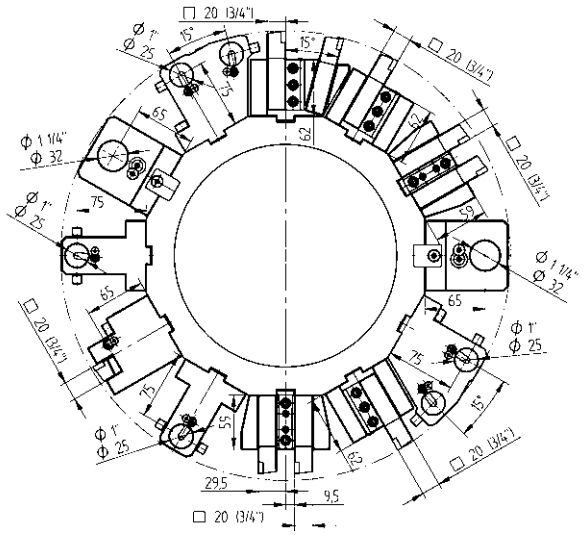

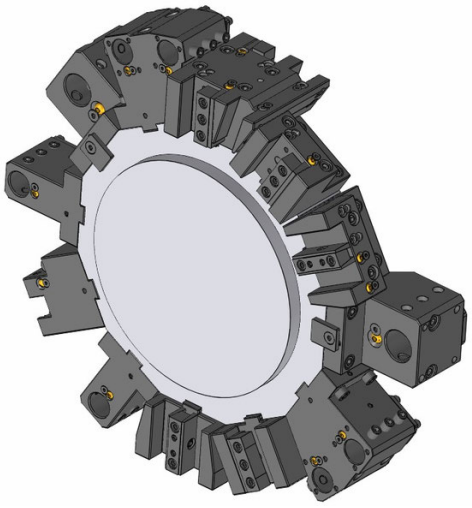

Static Toolholders - Standard Program

OD cutting holder

20	48-101470	
3/4"	48-104496	

OD cutting holder, HP-IC

20	48-101470-HP	IC 80 bar
3/4"	48-104496-HP	IC 80 bar

OD cutting holder, both sides

20	48-101471
3/4"	48-104755

Face cutting holder

20	48-102352
3/4"	48-104735

Combination toolholder, LF=75

Ø 25	48-101472
Ø 1"	48-104526

Combination toolholder

Ø 32	48-107155
Ø 1 1/4"	48-107260

Static Toolholders - Enhanced Program

OD cutting holder, double, Y axis

20	48-101473	
3/4"	48-104523	

OD cutting holder, both sides, double, 24 station (only for turret size 300)

20	48-107973	EC
3/4"	48-108110	EC

Cut-off holder

SH 26	48-100419

Cut-off holder, HP-IC

SH 26	48-102274R	IC 80 bar
SH 26	48-102274L	IC 80 bar
SH 32	48-112233R 343-810100R95	IC 80 bar
SH 32	48-112233L 343-810100L95	IC 80 bar

Combination toolholder, universal, double, 24 station (only for turret size 300)

Ø 25	48-107985	IC 80 bar
Ø 1"	48-108111	IC 80 bar

© WTO Werkzeug-Einrichtungen GmbH * Subject to change without notice * www.wto-tools.com

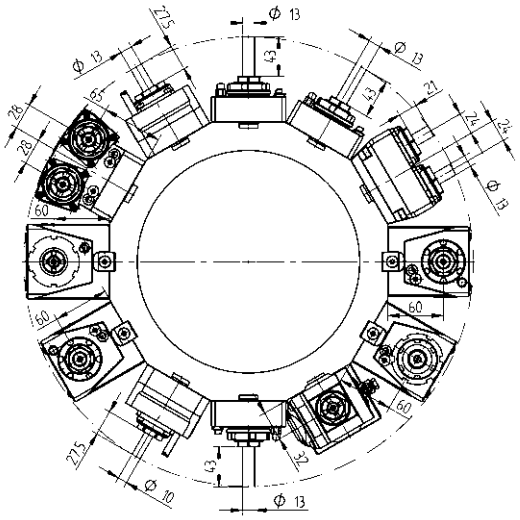

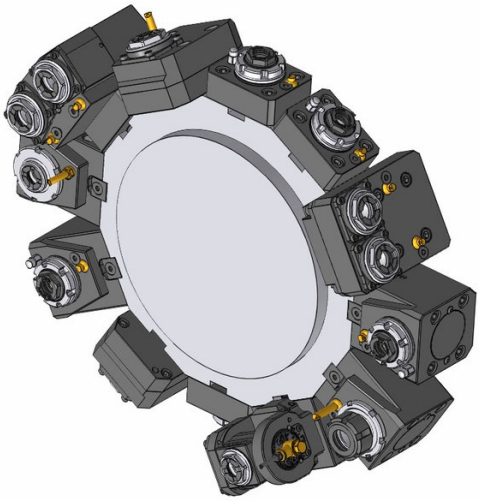

Driven Toolholders - QuickFlex®

Straight drill/milling unit

ER-20 QF	420120010-44	1:1	EC
	0067720000		
ER-20 QF	420120011-44	1:1	IC 80 bar
	0067720000		

Right angle drill/milling unit, LF=60

ER-20 QF	420520010-44	1:1	EC
	0067720000		
ER-20 QF	420520011-44	1:1	IC 80 bar
	0067720000		

Right angle drill/milling unit, both sides, LF=60

ER-20 QF	420520012-44	1:1	EC
	0067720000		

Driven Toolholders - Enhanced Program

Straight drill/milling unit

ER 25	410116004-44	1:1	EC
	00675000720		
ER 25	410116002-44	1:1	IC 80 bar
	00675000720		

Straight offset drill/milling unit

ER 20	410113004-44	1:2	EC
	00675000939		
ER 16	410110002-44	1:3	EC
	00675000937		
ER 25	410116005-44	1.5:1	EC
	00675000932		

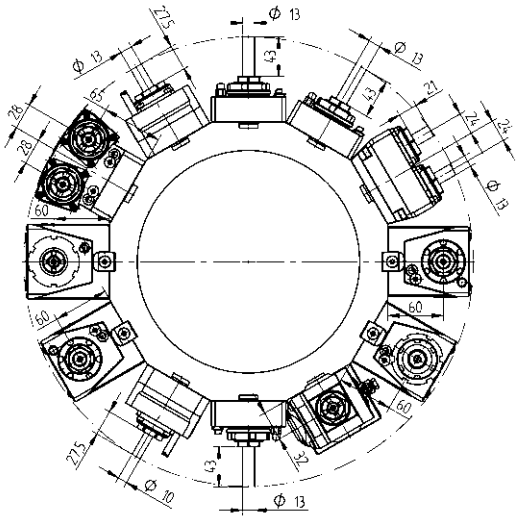

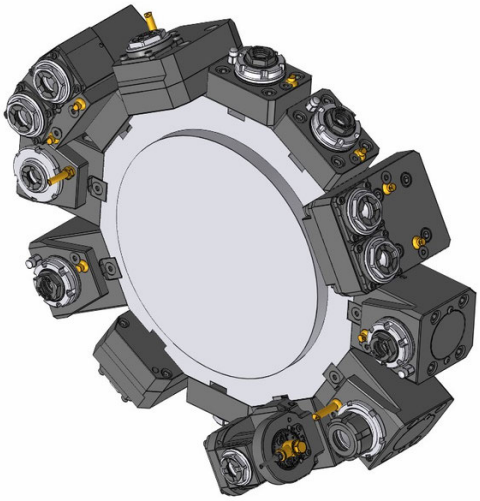

Driven Toolholders - Enhanced Program

Right angle drill/milling unit, LF=60

ER 25	410516005-44 00675000720	1:1	EC
ER 25	410516006-44 00675000720	1:1	IC 80 bar
ER 20	410513002-44 00675000833	1:2	EC
ER 20	410513003-44 00675000833	1:2	IC 80 bar
ER 16	410810006-44 00675000841	1:3	EC
ER 16	410810007-44 00675000841	1:3	IC 80 bar
ER 25	410516002-44 00675000720	2:1	EC
ER 25	410516003-44 00675000720	2:1	IC 80 bar

Right angle milling unit with combination mill arbor DIN 6358, LF=60

Ø 22	410622000-44 00675000483	1:1	EC
Ø 22	410622001-44 00675000483	2:1	EC

Driven Toolholders - Enhanced Program

Adjustable angle drill/milling unit, LF=32

ER 16	411010004-44 00675000902	1:1	EC
ER 16	411010005-44 00675000902	1:1	IC 80 bar
ER 11	411007006-44 00675000914	1:2	EC
ER 11	411007007-44 00675000914	1:2	IC 80 bar

Straight drill/milling unit, double, Y axis

ER 20	413002003-44 00675000939	1:1	EC
ER 20	413002004-44 00675000939	1:1	IC 80 bar

2-spindle - Right angle drill/milling unit, Y axis

ER 20	413502004-44 00675000939	1:1	EC
ER 20	413502005-44 00675000939	1:1	IC 80 bar

© WTO Werkzeug-Einrichtungen GmbH * Subject to change without notice * www.wto-tools.com

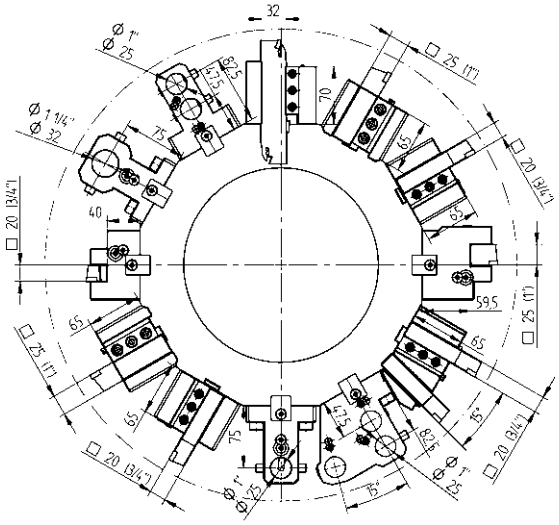

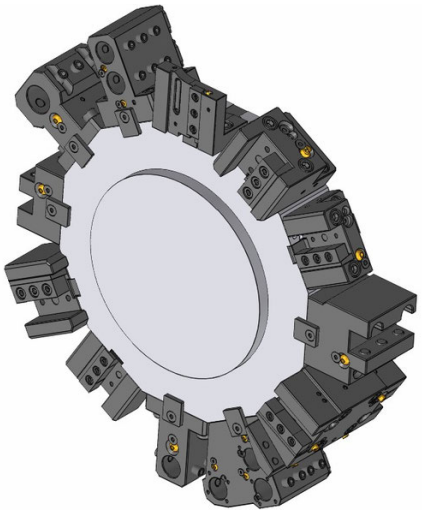

Static Toolholders - Standard Program

OD cutting holder

20	48-108585	
3/4"	48-108586	
25	48-106720	

OD cutting holder, HP-IC

25	48-106720-HP	IC 80 bar
1"	48-106730-HP	IC 80 bar

OD cutting holder, both sides

20	48-108460
3/4"	48-108588

Face cutting holder

20	48-108590
3/4"	48-108591

Face cutting holder

25	48-107758
1"	48-107759

Combination toolholder

Ø 25	48-107842	IC 80 bar
Ø 1"	48-107879	IC 80 bar
Ø 32	48-106727	IC 80 bar
Ø 1 1/4"	48-106734	IC 80 bar

Static Toolholders - Enhanced Program

OD cutting holder, double,
24 station (only for turret size 340)

20	48-108592	EC
3/4"	48-108593	EC

OD cutting holder, both sides, double,
24 station (only for turret size 340)

20	48-108461	EC
3/4"	48-108595	EC

Cut-off holder

SH 32	48-99637

Cut-off holder, HP-IC

SH 32	48-102276R	IC 80 bar
SH 32	48-102276L	IC 80 bar

Cut-off holder, adjustable

SH 32	48-110366	EC

Cut-off holder, adjustable, HP-IC

SH 32	48-109656R 343-810100R87	IC 80 bar
SH 32	48-109656L 343-810100L87	IC 80 bar

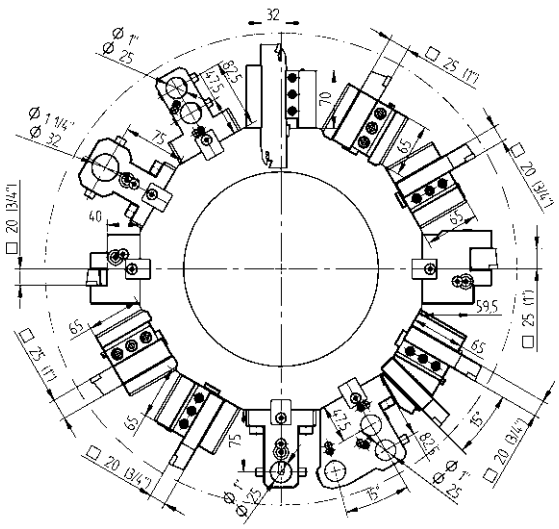

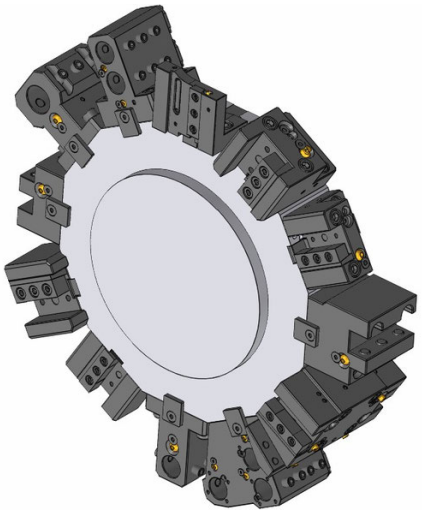

Static Toolholders - Enhanced Program

Combination toolholder, double

Ø 25	48-108596	IC 80 bar
Ø 1"	48-108597	IC 80 bar

Combination toolholder, universal, triple, 24 station (only for turret size 340)

Ø 25	48-108462	IC 80 bar
Ø 1"	48-108599	IC 80 bar

© WTO Werkzeug-Einrichtungen GmbH * Subject to change without notice * www.wto-tools.com

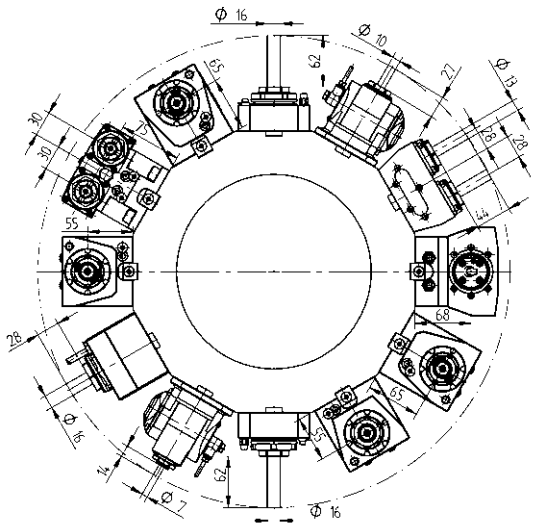

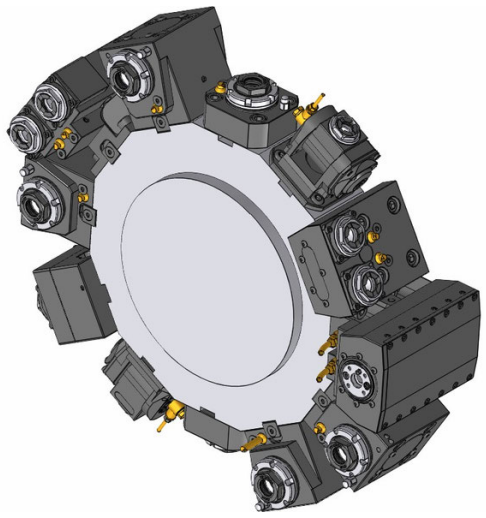

Driven Toolholders - QuickFlex®

Straight drill/milling unit

ER-25 QF	420125022-55	1:1	EC
	0067725000		
ER-25 QF	420125023-55	1:1	IC 80 bar
	0067725000		

Right angle drill/milling unit, LF=55

ER-25 QF	420525087-55	1:1	EC
	0067725000		
ER-25 QF	420525088-55	1:1	IC 80 bar
	0067725000		

Right angle drill/milling unit, LF=65

ER-25 QF	420525085-55	1:1	EC
	0067725000		
ER-25 QF	420525086-55	1:1	IC 80 bar
	0067725000		

Right angle drill/milling unit, both sides, LF=55

ER-25 QF	420525069-55	1:1	EC
	0067725000		

Right angle drill/milling unit, both sides, LF=65

ER-25 QF	420525077-55	1:1	EC
	0067725000		

Driven Toolholders - Enhanced Program

Straight drill/milling unit

ER 32	410120002-55	1:1	EC
	0067825000		
ER 32	410120003-55	1:1	IC 80 bar
	0067825000		

Straight milling unit

Ø 22	410222002-55	1:1	EC
	00675000483		
Ø 3/4"	410219000-55	1:1	EC
	00675000854		

Straight offset drill/milling unit

ER 25	410116027-55	1:1	EC
	00675000932		
ER 25	410116028-55	1:1	IC 80 bar
	00675000932		
ER 20	410113006-55	1:2	EC
	00675000939		
ER 20	410113004-55	1:2	IC 80 bar
	00675000939		
ER 16	410410000-55	1:3	EC
	00675000937		
ER 16	410410001-55	1:3	IC 80 bar
	00675000937		
ER 25	410116021-55	2:1	EC
	00675000932		
ER 25	410116022-55	2:1	IC 80 bar
	00675000932		

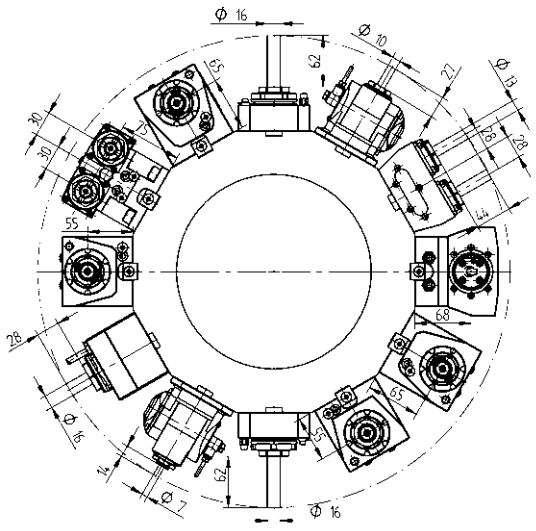

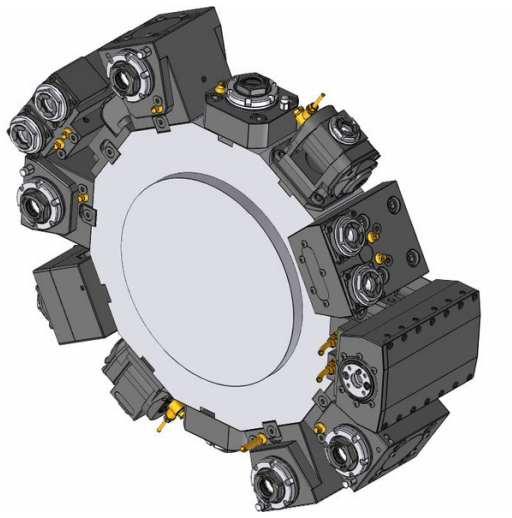

Driven Toolholders - Enhanced Program

Right angle drill/milling unit, LF=65

ER 32	410520045-55	1:1	EC
	0067825000		
ER 32	410520046-55	1:1	IC 80 bar
	0067825000		
ER-20 QF	420520029-55	1:2	EC
	0067720001		
ER-20 QF	420520030-55	1:2	IC 80 bar
	0067720001		
ER 16	410810022-55	1:3	EC
	00675000841		
ER 16	410810023-55	1:3	IC 80 bar
	00675000841		
ER-25 QF	420525055-55	2:1	EC
	0067725000		
ER-25 QF	420525056-55	2:1	IC 80 bar
	0067725000		

Right angle milling unit with combination mill arbor DIN 6358, LF=65

Ø 22	410622013-55	1:1	EC
	00675000483		
Ø 22	410622007-55	2:1	EC
	00675000483		
Ø 3/4"	410619008-55	1:1	EC
	00675000483		

Driven Toolholders - Enhanced Program

Right angle back set drill/milling unit, LF=65

ER 32	410520007-55	1:1	EC
	00675000592		
ER 32	410520008-55	1:1	IC 80 bar
	00675000592		
ER 32	410520009-55	2:1	EC
	00675000592		
ER 32	410520010-55	2:1	IC 80 bar
	00675000592		

Adjustable angle drill/milling unit

ER 16	411010001-55	1:1	EC
	00675000902		
ER 16	411010002-55	1:1	IC 80 bar
	00675000902		
ER 11	411007003-55	1:2	EC
	00675000914		
ER 11	411007004-55	1:2	IC 80 bar
	00675000914		

© WTO Werkzeug-Einrichtungen GmbH * Subject to change without notice * www.wto-tools.com

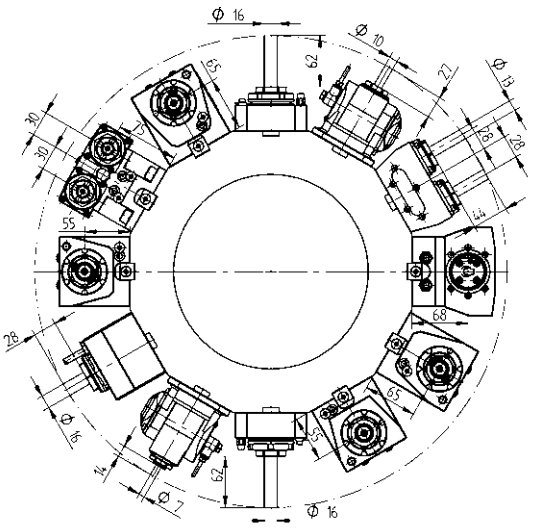

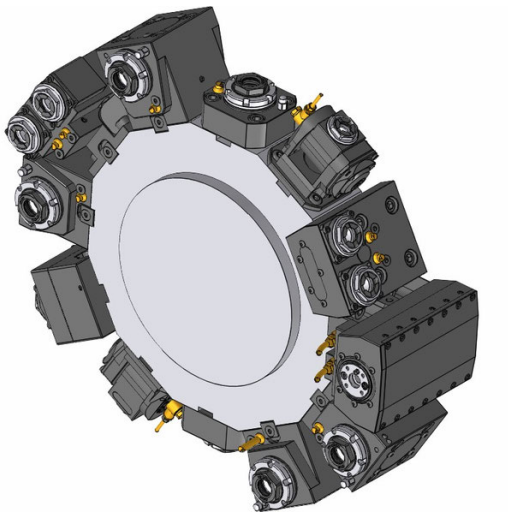

Driven Toolholders - Enhanced Program

Slitting saw unit

Type 14-2	411500000-55	2.73:1	EC
	00675000489		
	160016142 Ø 16		
	160022142 Ø 22		
	160027142 Ø 27		
	160015142 Ø 5/8"		
	160019142 Ø 3/4"		
	160023142 Ø 7/8"		
	160025142 Ø 1"		

Straight drill/milling unit, double, Y axis

ER 20	413002001-55	1:1	EC
	00675000944		

2-spindle - Right angle drill/milling unit, Y axis

ER 20	413502012-55	1:1	EC
	00675000944		

Broaching unit for ID and OD

TN765050	414532003-55	1:1	EC

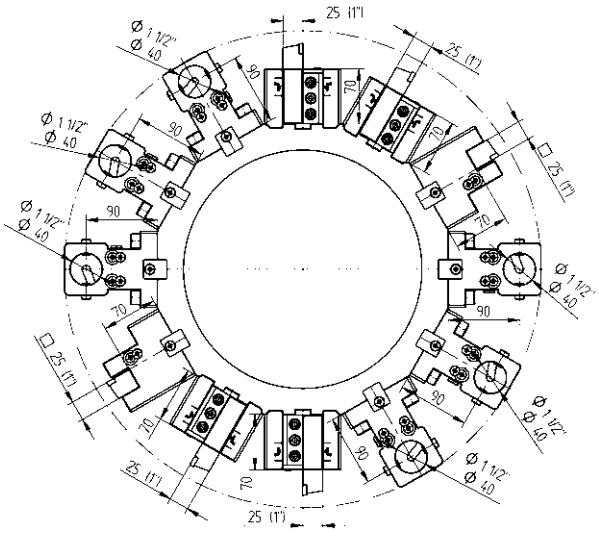

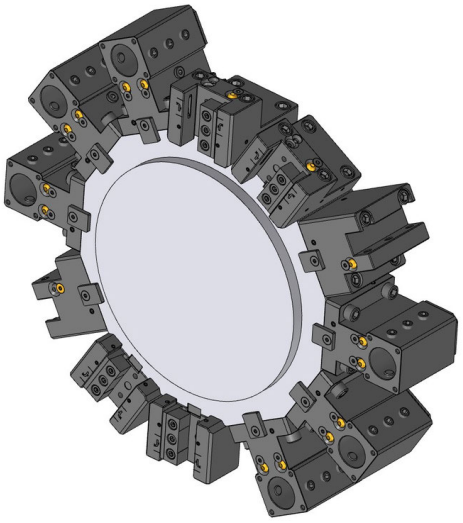

Static Toolholders - Standard Program

OD cutting holder, HP-IC

25	48-107657-HP	IC 80 bar
1"	48-107658-HP	IC 80 bar

OD cutting holder, both sides, HP-IC

25	48-114828-HP	IC 80 bar
1"	48-114829-HP	IC 80 bar

Face cutting holder, HP-IC

25	48-113236-HP	IC 80 bar
1"	48-113237-HP	IC 80 bar

Combination toolholder

Ø 40	48-107659	
	241140020 ER32	
	241140026 ER40	
Ø 1 1/2"	48-107660	
	2411150020 ER32	

Static Toolholders - Enhanced Program

Cut-off holder

SH 32	48-100204	

Cut-off holder, HP-IC

SH 32	48-102279R	IC 80 bar
SH 32	48-102279L	IC 80 bar

© WTO Werkzeug-Einrichtungen GmbH * Subject to change without notice * www.wto-tools.com

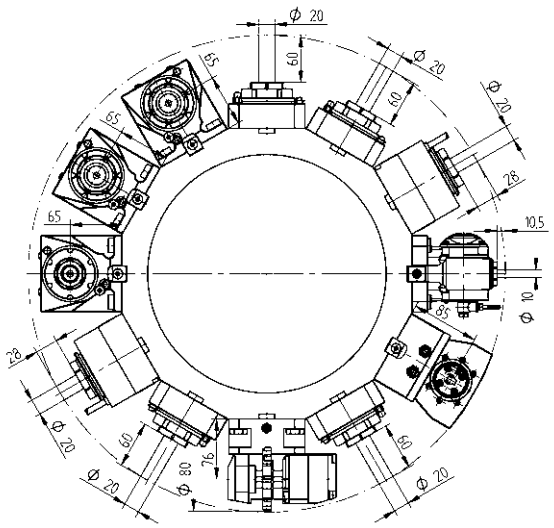

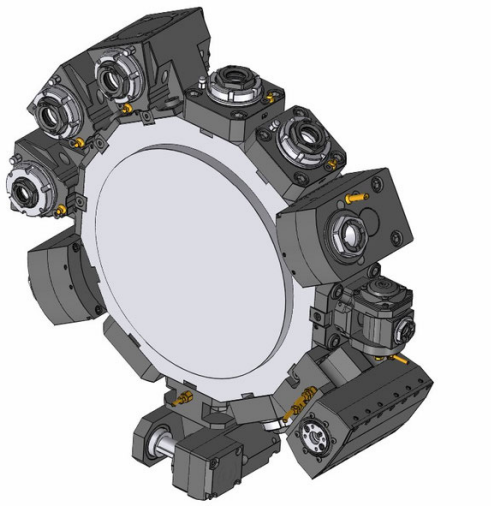

Driven Toolholders - QuickFlex®

Straight drill/milling unit

ER-32 QF	420132019-65	1:1	EC
	0067732000		
ER-32 QF	420132020-65	1:1	IC 80 bar
	0067732000		

Right angle drill/milling unit

ER-32 QF	420532025-65	1:1	EC
	0067732000		
ER-32 QF	420532026-65	1:1	IC 80 bar
	0067732000		

Right angle drill/milling unit, both sides

ER-32 QF	420532043-65	1:1	EC
	0067732000		

Driven Toolholders - Enhanced Program

Straight offset drill/milling unit

ER 32	410120030-65	1:1	EC
	00675000958		
ER 32	410120031-65	1:1	IC 80 bar
	00675000958		
ER 20	410113002-65	1:2	EC
	00675000591		
ER 20	410113003-65	1:2	IC 80 bar
	00675000591		

Right angle drill/milling unit

ER-25 QF	420525014-65	1:2	EC
	0067725001		
ER-25 QF	420525015-65	1:2	IC 80 bar
	0067725001		
ER-32 QF	420532031-65	2:1	EC
	0067732000		
ER-32 QF	420532032-65	2:1	IC 80 bar
	0067732000		

Adjustable angle drill/milling unit

ER 16	411010000-65	1:1	EC
	00675000902		
ER 16	411010001-65	1:1	IC 80 bar
	00675000902		
ER 11	411007001-65	1:2	EC
	00675000914		
ER 11	411007000-65	1:2	IC 80 bar
	00675000914		

© WTO Werkzeug-Einrichtungen GmbH * Subject to change without notice * www.wto-tools.com

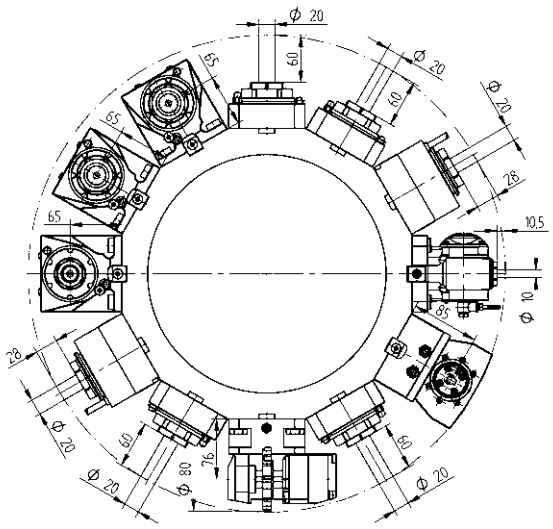

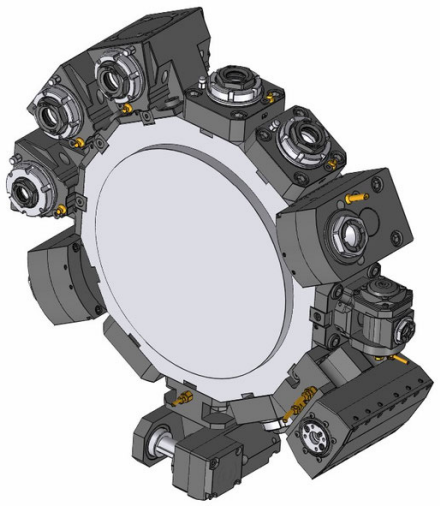

Driven Toolholders - Enhanced Program

Offset slitting saw unit

Type 14-2 411500001-65 2.73:1 EC

- 00675000448
- 160016142 Ø 16
- 160022142 Ø 22
- 160027142 Ø 27
- 160015142 Ø 5/8"
- 160019142 Ø 3/4"
- 160023142 Ø 7/8"
- 160025142 Ø 1"

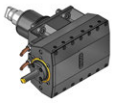

Broaching unit for ID and OD

TN765050 414532003-65 1:1 EC

© WTO Werkzeug-Einrichtungen GmbH * Subject to change without notice * www.wto-tools.com

Standard reduction sleeves - cylindrical

Reduction sleeve Ø 25

240025006	ø 6
240025008	ø 8
240025010	ø 10
240025012	ø 12
240025014	ø 14
240025016	ø 16
240025020	ø 20

Reduction sleeve Ø 32

240032006	ø 6
240032008	ø 8
240032010	ø 10
240032012	ø 12
240032014	ø 14
240032016	ø 16
240032018	ø 18
240032020	ø 20
240032025	ø 25

Reduction sleeve Ø 40

240040006	ø 6
240040008	ø 8
240040010	ø 10
240040012	ø 12
240040014	ø 14
240040016	ø 16
240040020	ø 20
240040025	ø 25
240040032	ø 32

Reduction sleeve Ø 1"

2400100025	ø 1/4"
2400100031	ø 5/16"
2400100038	ø 3/8"
2400100050	ø 1/2"
2400100063	ø 5/8"
2400100075	ø 3/4"

Reduction sleeve Ø 1 1/4"

2400125038	ø 3/8"
2400125050	ø 1/2"
2400125063	ø 5/8"
2400125075	ø 3/4"
2400125088	ø 7/8"
2400125100	ø 1"

Standard reduction sleeves - cylindrical

Reduction sleeve Ø 1 1/2"

2400150038	ø 3/8"
2400150050	ø 1/2"
2400150063	ø 5/8"
2400150075	ø 3/4"
2400150088	ø 7/8"
2400150100	ø 1"
2400150125	ø 1 1/4"

Standard reduction sleeves - morse taper

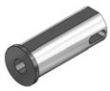

Reduction sleeve Ø 40

240540001	MT 1
240540002	MT 2
240540003	MT 3
240540004	MT 4

© WTO Werkzeug-Einrichtungen GmbH * Subject to change without notice * www.wto-tools.com

Collets DIN 6499B (ER/ESX)

ER 11	mm	inch
190011000	ø 7-0.5	ø 0.276-0.020
190011010	ø 1-0.5	ø 0.039-0.020
190011015	ø 1.5-1	ø 0.059-0.039
190011020	ø 2-1.5	ø 0.079-0.059
190011025	ø 2.5-2	ø 0.098-0.079
190011030	ø 3-2.5	ø 0.118-0.098
190011035	ø 3.5-3	ø 0.138-0.118
190011040	ø 4-3.5	ø 0.158-0.138
190011045	ø 4.5-4	ø 0.177-0.158
190011050	ø 5-4.5	ø 0.197-0.177
190011055	ø 5.5-5	ø 0.217-0.197
190011060	ø 6-5.5	ø 0.236-0.217
190011065	ø 6.5-6	ø 0.256-0.236
190011070	ø 7-6.5	ø 0.276-0.256

ER 16	mm	inch
190016000	ø 10-0.5	ø 0.394-0.020
190016010	ø 1-0.5	ø 0.039-0.020
190016020	ø 2-1	ø 0.079-0.039
190016030	ø 3-2	ø 0.118-0.079
190016040	ø 4-3	ø 0.158-0.118
190016050	ø 5-4	ø 0.197-0.158
190016060	ø 6-5	ø 0.236-0.197
190016070	ø 7-6	ø 0.276-0.236
190016080	ø 8-7	ø 0.315-0.276
190016090	ø 9-8	ø 0.354-0.315
190016100	ø 10-9	ø 0.394-0.354

ER 20	mm	inch
190020000	ø 13-1	ø 0.512-0.039
190020010	ø 1-0.5	ø 0.039-0.020
190020020	ø 2-1	ø 0.079-0.039
190020030	ø 3-2	ø 0.118-0.079
190020040	ø 4-3	ø 0.157-0.118
190020050	ø 5-4	ø 0.197-0.157
190020060	ø 6-5	ø 0.236-0.197
190020070	ø 7-6	ø 0.276-0.236
190020080	ø 8-7	ø 0.315-0.276
190020090	ø 9-8	ø 0.354-0.315
190020100	ø 10-9	ø 0.394-0.354
190020110	ø 11-10	ø 0.433-0.394
190020120	ø 12-11	ø 0.472-0.433
190020130	ø 13-12	ø 0.512-0.472

Collets DIN 6499B (ER/ESX)

ER 25	mm	inch
190025000	ø 16-1	ø 0.630-0.039
190025010	ø 1-0.5	ø 0.039-0.020
190025020	ø 2-1	ø 0.079-0.039
190025030	ø 3-2	ø 0.118-0.079
190025040	ø 4-3	ø 0.157-0.118
190025050	ø 5-4	ø 0.197-0.157
190025060	ø 6-5	ø 0.236-0.197
190025070	ø 7-6	ø 0.276-0.236
190025080	ø 8-7	ø 0.315-0.276
190025090	ø 9-8	ø 0.354-0.315
190025100	ø 10-9	ø 0.394-0.354
190025110	ø 11-10	ø 0.433-0.394
190025120	ø 12-11	ø 0.472-0.433
190025130	ø 13-12	ø 0.512-0.472
190025140	ø 14-13	ø 0.551-0.512
190025150	ø 15-14	ø 0.591-0.551
190025160	ø 16-15	ø 0.630-0.591

ER 32	mm	inch
190032000	ø 20-2	ø 0.787-0.079
190032020	ø 2-1	ø 0.079-0.039
190032030	ø 3-2	ø 0.118-0.079
190032040	ø 4-3	ø 0.157-0.118
190032050	ø 5-4	ø 0.197-0.157
190032060	ø 6-5	ø 0.236-0.197
190032070	ø 7-6	ø 0.276-0.236
190032080	ø 8-7	ø 0.315-0.276
190032090	ø 9-8	ø 0.354-0.315
190032100	ø 10-9	ø 0.394-0.354
190032110	ø 11-10	ø 0.433-0.394
190032120	ø 12-11	ø 0.472-0.433
190032130	ø 13-12	ø 0.512-0.472
190032140	ø 14-13	ø 0.551-0.512
190032150	ø 15-14	ø 0.591-0.551
190032160	ø 16-15	ø 0.630-0.591
190032170	ø 17-16	ø 0.669-0.630
190032180	ø 18-17	ø 0.709-0.669
190032190	ø 19-18	ø 0.748-0.709
190032200	ø 20-19	ø 0.787-0.748

© WTO Werkzeug-Einrichtungen GmbH * Subject to change without notice * www.wto-tools.com

Collets DIN 6499B (ER/ESX)

ER 40	mm	inch
190040000	ø 26-3	ø 1.024-0.118
190040030	ø 3-2	ø 0.118-0.079
190040040	ø 4-3	ø 0.157-0.118
190040050	ø 5-4	ø 0.197-0.157
190040060	ø 6-5	ø 0.236-0.197
190040070	ø 7-6	ø 0.276-0.236
190040080	ø 8-7	ø 0.315-0.276
190040090	ø 9-8	ø 0.354-0.315
190040100	ø 10-9	ø 0.394-0.354
190040110	ø 11-10	ø 0.433-0.394
190040120	ø 12-11	ø 0.472-0.433
190040130	ø 13-12	ø 0.512-0.472
190040140	ø 14-13	ø 0.551-0.512
190040150	ø 15-14	ø 0.591-0.551
190040160	ø 16-15	ø 0.630-0.591
190040170	ø 17-16	ø 0.669-0.630
190040180	ø 18-17	ø 0.709-0.669
190040190	ø 19-18	ø 0.748-0.709
190040200	ø 20-19	ø 0.787-0.748
190040210	ø 21-20	ø 0.827-0.787
190040220	ø 22-21	ø 0.866-0.827
190040230	ø 23-22	ø 0.906-0.866
190040240	ø 24-23	ø 0.945-0.906
190040250	ø 25-24	ø 0.984-0.945
190040260	ø 26-25	ø 1.024-0.984

Collets DIN 6499D (ER/ESX) - sealed, for IC

ER 11	mm	inch
191011030	ø 3	
191011040	ø 4	
191011050	ø 5	
191011060	ø 6	
191111013-in		ø 0.125
191111019-in		ø 0.188
191111025-in		ø 0.25

ER 16	mm	inch
191016000	ø 3-10	
191016030	ø 3	
191016040	ø 4	
191016050	ø 5	
191016060	ø 6	
191016070	ø 7	
191016080	ø 8	
191016090	ø 9	
191016100	ø 10	
191116001		ø 0.125-0.375
191116013-in		ø 0.125
191116019-in		ø 0.188
191116025-in		ø 0.25
191116031-in		ø 0.313
191116038-in		ø 0.375

ER 20	mm	inch
191020000	ø 3-12	
191020030	ø 3	
191020040	ø 4	
191020050	ø 5	
191020060	ø 6	
191020070	ø 7	
191020080	ø 8	
191020090	ø 9	
191020100	ø 10	
191020110	ø 11	
191020120	ø 12	
191120001		ø 0.125-0.5
191120013-in		ø 0.125
191120019-in		ø 0.188
191120025-in		ø 0.25
191120031-in		ø 0.313
191120038-in		ø 0.375
191120044-in		ø 0.438
191120050-in		ø 0.5

© WTO Werkzeug-Einrichtungen GmbH * Subject to change without notice * www.wto-tools.com

Collets DIN 6499D (ER/ESX) - sealed, for IC

ER 25	mm	inch
191025000	ø 4-16	
191025030	ø 3	
191025040	ø 4	
191025050	ø 5	
191025060	ø 6	
191025070	ø 7	
191025080	ø 8	
191025090	ø 9	
191025100	ø 10	
191025110	ø 11	
191025120	ø 12	
191025130	ø 13	
191025140	ø 14	
191025150	ø 15	
191025160	ø 16	
191125001		ø 0.25-0.625
191125025-in		ø 0.25
191125031-in		ø 0.313
191125038-in		ø 0.375
191125044-in		ø 0.438
191125050-in		ø 0.5
191125056-in		ø 0.563
191125063-in		ø 0.625

ER 32	mm	inch
191032000	ø 4-20	
191032030	ø 3	
191032040	ø 4	
191032050	ø 5	
191032060	ø 6	
191032070	ø 7	
191032080	ø 8	
191032090	ø 9	
191032100	ø 10	
191032110	ø 11	
191032120	ø 12	
191032130	ø 13	
191032140	ø 14	
191032150	ø 15	
191032160	ø 16	
191032170	ø 17	
191032180	ø 18	
191032190	ø 19	
191032200	ø 20	
191132001		ø 0.25-0.75
191132025-in		ø 0.25
191132031-in		ø 0.313
191132038-in		ø 0.375
191132044-in		ø 0.438
191132050-in		ø 0.5
191132056-in		ø 0.563
191132063-in		ø 0.625
191132069-in		ø 0.688
191132075-in		ø 0.75

Collets DIN 6499D (ER/ESX) - sealed, for IC

ER 40	mm	inch
191040060	ø 6	
191040080	ø 8	
191040100	ø 10	
191040120	ø 12	
191040140	ø 14	
191040160	ø 16	
191040180	ø 18	
191040200	ø 20	
191040220	ø 22	
191040250	ø 25	
191140025-in		ø 0.25
191140031-in		ø 0.313
191140038-in		ø 0.375
191140044-in		ø 0.438
191140050-in		ø 0.5
191140056-in		ø 0.563
191140063-in		ø 0.625
191140069-in		ø 0.688
191140075-in		ø 0.75
191140088-in		ø 0.875
191140100-in		ø 1

WTO worldwide

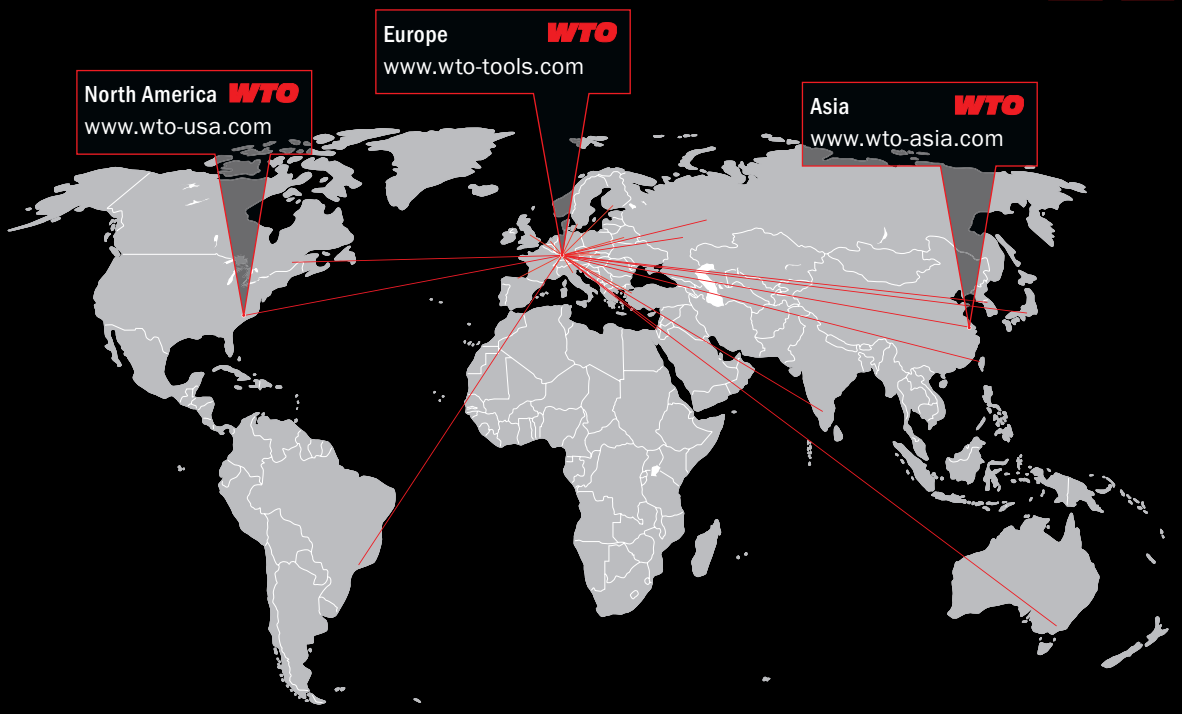

WTO Werkzeug-Einrichtungen GmbH
Neuer Hohdammweg 1
77797 Ohlsbach
Germany

WTO Inc.
13900-F South Lakes Dr.
Charlotte, NC 28273
USA

WTO Asia
WTO Precision Tool Holders (Shanghai) Co. Ltd.
Room 109-110, Building 2
No. 228 Banting Road
Jiuting Town,
Songjiang District
201615 Shanghai
China

Our distribution partners. Competence right there.

Australia
Dimac Tooling Ltd.
sales@dimac.com.au

Belarus
LLC “PMI Engineering”
tool@pmi.by

Brazil
TF2
tfdois@tfdois.com.br

Canada
Mittmann Industrial Inc.
info@mittmann.com

China
Shanghai Gangde
wtocando@yahoo.com

Czech Republic
ALBA precision, spol. s.r.o.
info@albaprecision.cz

Denmark
Tool-part
cj@tool-part.dk

Finland
Suomen Terätuonti Oy
myynti@stt.as

France
Alexandre Mathelin
alm@wto.de

Great Britain
Cutwel Ltd.
sales@cutwel.net

India
Ulhas Patil
u.patil@wto-asia.com

Israel
E.Y.A.R. Ltd.
boris@eyar.co.il

Italy
Prymark srl
commerciale@prymark.it

Japan
NK Works Co. Ltd.
k_samba@nk-works.co.jp

Korea
WTO Office Korea
is.chon@wto-korea.com

Mexico
Workholding Engineering De México
info@wem.com.mx

Netherlands
Toologic BeNeLux B.V.
info@toologic-benelux.nl

Norway
Helge Karlsen Verktøy og Maskin AS
hkvm@hkvm.no

Poland
ARCO Andrzej Rudenko
info@arcotools.pl

Romania
SC Elif Trading SRL
bulent.ozkan@eliftrading.com

Slovakia
ALBA precision s.r.o.
albaprecision@albaprecision.sk

Spain
ITALMATIC, S.A.
italmatic@italmatic.es

Sweden
Bonthron & Ewing AB
info@bonthron-ewing.se

Switzerland
Utilis AG
info@utilis.com

Taiwan
Kaiko Co., Ltd.
info@kaiko.com.tw

Turkey
MYK CNC MAKINA SAN. VE
huseyin.tatlidil@mykcnc.com.tr

Ukraine
„LLC“ SPA Stankopromimport
info@phoenix-ua.com

WTO® and nanoFlex® are registered trademarks of WTO Vermögensverwaltung GmbH
CoolSpeed® is a registered trademark of WTO Inc.

09 | 2022 us